DME

Digital dosing pumps

be
think
innovate

GRUNDFOS

Table of contents

1. General data 3
Performance range 3
Digital Dosing 4

2. Identification 5
Type key 5

3. Functions 6
Overview of functions 6
Functional description 7
Control panel 8
Menu 10
Operating modes 11
Dosing monitoring 14
Control panel lock 15
Units 15
Wiring diagram DME-AR 16

4. Construction 18

5. Dimensions 19

6. Technical data 20

7. Pump selection 21
Standard range 21
Non-standard range 23

8. Pumped liquids 24

9. Further product information 25
WebCAPS 25
WinCAPS 26
GO CAPS 27

1. General data

Performance range

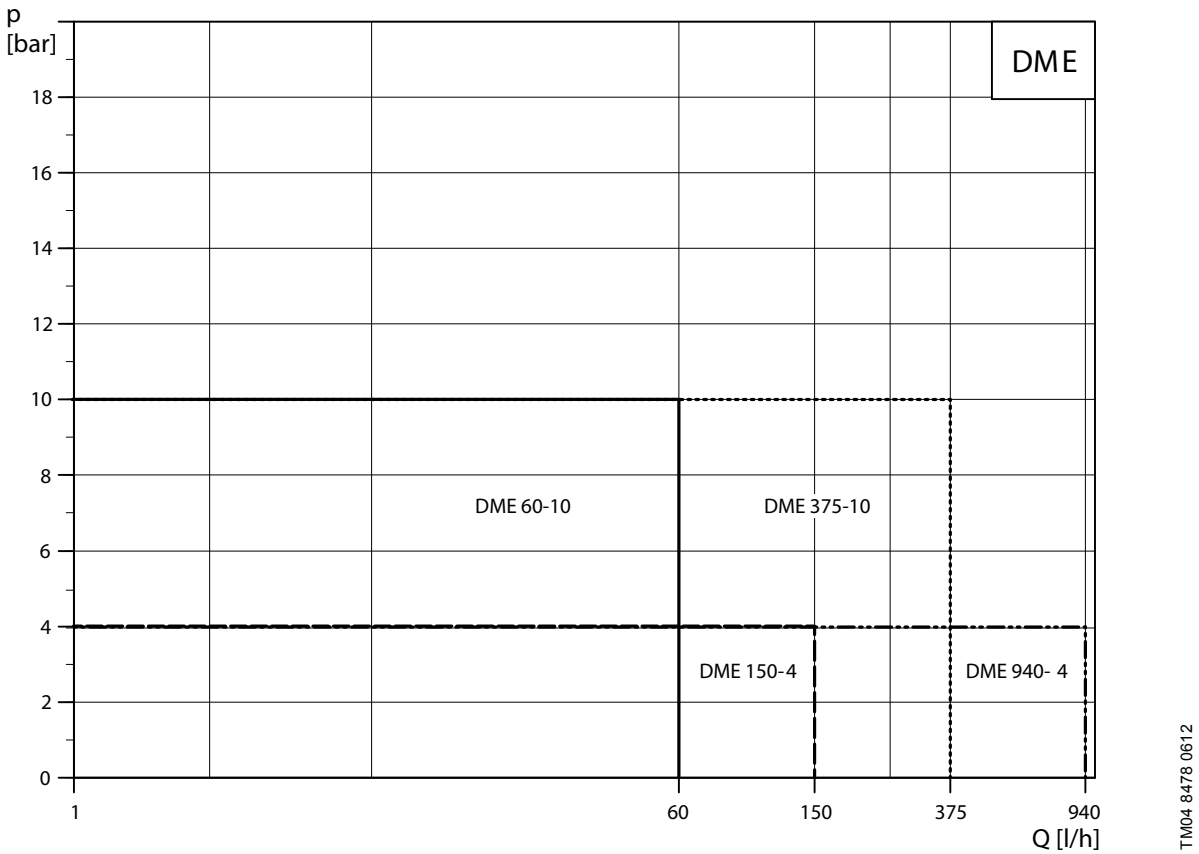

Fig. 1 Performance range DME

Digital Dosing

Digital Dosing represents state-of-the-art technology. This patented Grundfos solution sets new standards, including new principles and methods.

TM04 8479 0612

Fig. 2 DME pumps

Precise and easy setting

The operator can easily install and set the pump to discharge exactly the quantity of dosing liquid required in the application. In the display, the setting of the pump is read out directly in ml/h or l/h, pulse or batch, and the operation mode is easily identified by means of icons.

Unique technology

A unique drive and microprocessor control ensure that dosing liquids are discharged precisely and with low pulsation even when the pump is operating with high viscosity or degassing liquids. Instead of the conventional stroke length adjustment, the capacity of the DME is regulated by automatic adjustment of the motor speed during the discharge stroke and by fixed suction stroke speed, ensuring optimal and uniform mixing.

Fewer variants to cover all needs

The pumps feature a powerful variable speed motor, a turn-down ratio of 1:800 and a complete control interface including:

- Full pulse control
- Pulse batch control
- Internal timer batch control
- Analog 0/4-20 mA control
- Level control
- Fieldbus communication module.

This ensures that the DME pumps cover the range from 60 to 940 litres per hour up to 10 bar. The switch mode power supply ensures that the same pump is working precisely, irrespective of the mains supply (100-240 V, 50/60 Hz).

The DME dosing pumps feature diaphragm dosing head with integrated vent valve, suction and discharge ball valves. The pumps are fitted with power cable and plug.

2. Identification

Type key

Example:	DME	60-	10	AR-	PP/	E/	C-	F-	3	1	A1	F

Type range

Maximum capacity [l/h]

60
150
375
940

Maximum pressure [bar]

4
10

Control variant

AR	Standard
AP	Standard + Profibus
B	Basic

Dosing head material

PP	Polypropylene
PV	PVDF
SS	Stainless steel 1.4401

Gasket material

E	EPDM
T	PTFE
V	FKM

Valve ball material

C	Ceramic
G	Glass
SS	Stainless steel 1.4401
T	PTFE

Control panel

F	Front-fitted
S	Side-fitted

Voltage

3	1 x 100-240 V, 50/60 Hz

Valve type

1	Standard
2	Spring-loaded

Connection, suction/discharge

A1	Threaded, Rp 3/4"
A2	Threaded, Rp 1 1/4"
A3	Threaded, NPT 3/4"
A4	Threaded, NPT 1 1/4"
Q	Hose 19/27 and 25/34

Mains plug

F	EU
G	UK
I	Australia
B	USA
J	Japan
E	Switzerland
L	Argentina

3. Functions

Overview of functions

	DME 60-940 B	DME 60-940 AR	DME 60-940 AP
	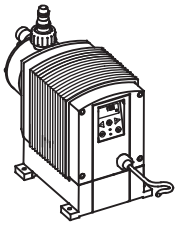 TM04 8827 1413	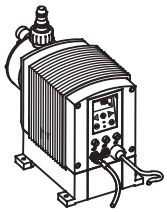 TM04 8826 1413	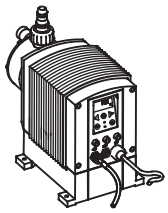 TM04 8789 1313
Capacity control, see page 11			
Internal stroke-frequency control	●	●	●
Internal stroke-speed control	●	●	●
Control panel, see page 8			
Capacity setting in litres, millilitres or US gallons	●	●	●
Display with background light and soft-touch buttons	●	●	●
Easy set-up menu with language options	●	●	●
On/Off button	●	●	●
Maximum capacity button (priming)	●	●	●
Green indicator light for operating indication	●	●	●
Red indicator light for fault indication	●	●	●
Control panel lock	●	●	●
Side-fitted as an option	●	●	●
Operating modes, see page 11			
Manual control	●	●	●
Pulse control		●	●
Analog 0/4-20 mA control		●	●
Timer-based batch control		●	●
Pulse-based batch control		●	●
Functions, see page 12/14			
Dosing monitoring		●	●
Dual-level control		●	●
Calibration of pump for the actual installation	●	●	●
Anti-cavitation (reduced suction speed)	●	●	●
Capacity limitation	●	●	●
Counters for strokes, operating hours and power on/off	●	●	●
Fieldbus communication			●
Overload protection	●	●	●
Error message in display	●	●	●
Diaphragm leakage sensor★		●	●
Dosing signal output		●	●
Power supply, see page 14			
Switch-mode power supply		●	●
Inputs/outputs, see page 17/17			
Input for pulse control		●	●
Input for analog 0/4-20 mA control		●	●
Input for dual-level control		●	●
Input for external start/stop		●	●
Alarm relay output (variant AR)		●	●
Dosing output		●	●
Input for external on/off switch		●	●

★ When dosing crystallising media, a diaphragm leakage sensor must be installed. DME-B is not suitable for crystallising media.

Functional description

The electronically controlled variable-speed motor of the DME pump provides optimum control of the stroke speed. As shown in the figure below, the duration of each suction stroke is constant while the duration of each discharge stroke varies according to the capacity set, resulting in optimum discharge flow in any operating situation.

The advantages:

- The pump always operates at full stroke length, irrespective of the capacity set; this ensures optimum accuracy, priming and suction.
- A capacity range of 1:800 for each pump size.
- Smooth and constant dosing ensuring an optimum mixing ratio at the injection point.
- Significant reduction of pressure surges preventing mechanical stress on diaphragm, hoses, pipes, connections and other dosing parts exposed to leakage and wear.
- The installation is less affected by long suction and discharge lines.
- Easier dosing of highly viscous and gas-containing liquids.

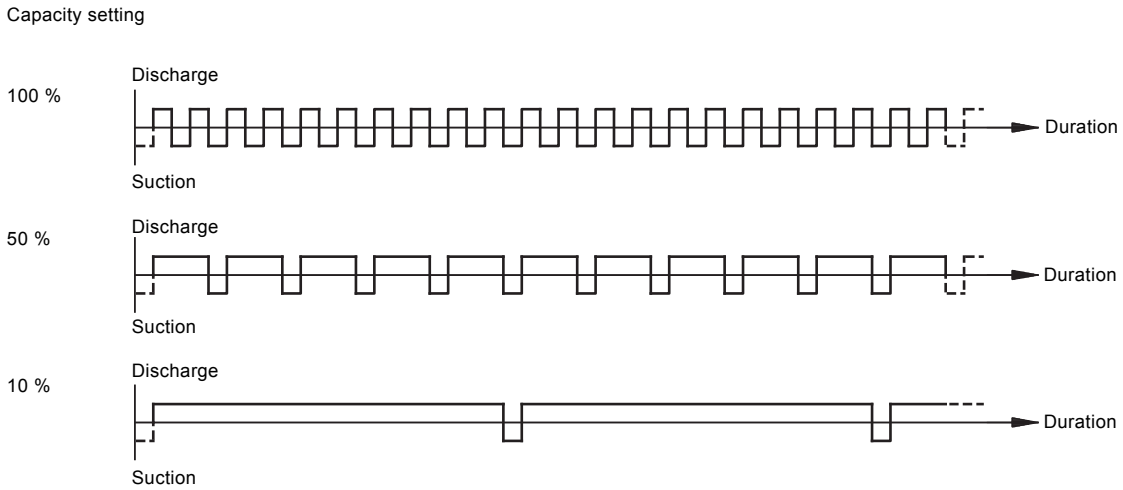

Fig. 3 Relation between stroke-frequency adjustment and capacity

Control panel

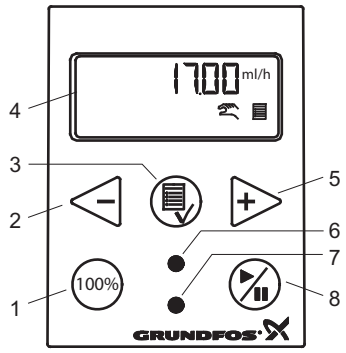

TM04 8481 0612

Fig. 4 Control panel

Pos.	Description
1	Maximum capacity button (priming)
2	Navigation/settings
3	Menu/accept
4	LCD display
5	Navigation/settings
6	Green indicator light
7	Red indicator light
8	On/Off button

TM04 8702 5112

Fig. 5 Front-fitted control panel

TM04 8703 5112

Fig. 6 Side-fitted control panel

Maximum capacity button

If the maximum capacity is required over a short period of time, for example during start-up, press the 100% button on the pump control panel. When the button is released, the pump automatically returns to the previous operating mode.

To set the pump to run for a specific number of seconds at maximum capacity, press the 100% and ▷+ buttons simultaneously. The remaining number of seconds appear in the display. The maximum value is 300 seconds. To stop the pump before the set time has passed, press the ▶/■ button.

This feature is useful when flushing the pump.

Indicator lights and alarm relay output

Operating state	Green indicator light	Red indicator light	Display	Alarm relay output★1
Pump running	On	Off	Normal indication	
Set to stop	Flashing	Off	Normal indication	
Pump fault	Off	On	EEPROM	
Supply failure	Off	Off	Off	
Pump running, low chemical level★2	On	On	LOW	
Empty tank★2	Off	On	EMPTY	
Analog signal < 2 mA	Off	On	NO mA	
Insufficient dosing according to signal from dosing monitor★3	On	On	NO mA	
Overheating	Off	On	MAX TEMP	
Internal communication failure	Off	On	INT COM	
Internal Hall failure★4	Off	On	HALL	
Diaphragm failure (leakage)★5	Off	On	LEAKAGE	
Max. pressure exceeded★5	Off	On	OVERLOAD	
More pulses than capacity	On	On	MAX FLOW	
No detection of motor rotation★4	On	On	ORIGO	

★1 Applies only to control variant AR.

★2 Requires connection to level sensor.

★3 Requires activation of the dosing monitoring function and connection to a dosing monitor.

★4 Please contact a Grundfos service centre.

★5 After the fault has been rectified, press to reset alarm.

★6 The pump makes 10 attempts to restart before going into permanent off mode.

Menu

The DME dosing pumps feature a user-friendly menu.
To activate the menu, press the button .
During initial start-up, all menu texts appear in the English language. You can set the menu to display other languages, see page 14.

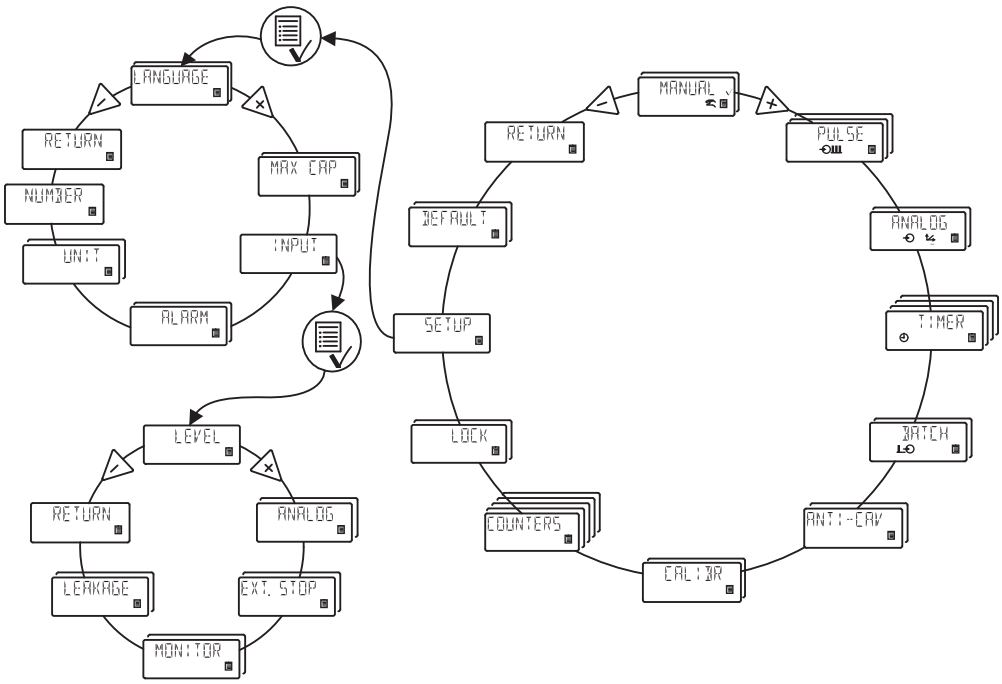

TM04 8484 0612

Fig. 7 Menu overview

Operating modes

Manual control

The pump ensures constant dosing according to the quantity set in l/h or ml/h by means of the ⊖ and ⊕ buttons. The pump automatically changes between the measuring units.

Setting range

Pump type	Setting range	
	From [ml/h]	To [l/h]
DME 60	75	60
DME 150	200	150
DME 375	500	376
DME 940	1200	940

When the anti-cavitation functions is enabled, the maximum flow is reduced (see page 12).

Pulse control

Applies to DME-AR and DME-AP

The pump doses according to an external pulse signal, for example from a water meter.

There is no direct relation between pulses and dosing strokes. The pump automatically calculates its optimal speed to ensure the required quantity is dosed for each pulse. The quantity to be dosed is set in ml/pulse. The pump adjusts its speed and/or stroke frequency according to two factors:

- The frequency of external pulses
- The set quantity per pulse.

Setting range

Pump type	Setting range [ml/pulse]
DME 60-10	0.000625 - 120
DME 150-4	0.00156 - 300
DME 375-10	0.00392 - 750
DME 940-4	0.00980 - 1880

Analog 0/4-20 mA control

Applies to DME-AR and DME-AP

The pump ensures dosing according to an external analog signal. The dosed capacity is proportional to the input value in mA.

Setting	Input signal	Dosed quantity as a percentage of the max. capacity★
4-20 (default):	4 mA	0 %
	20 mA	100 %
20-4:	4 mA	100 %
	20 mA	0 %
0-20:	0 mA	0 %
	20 mA	100 %
20-0:	0 mA	100 %
	20 mA	0 %

★ If a maximum capacity limitation has been set, the dosed quantity is a percentage of the set capacity limitation (see page 13).

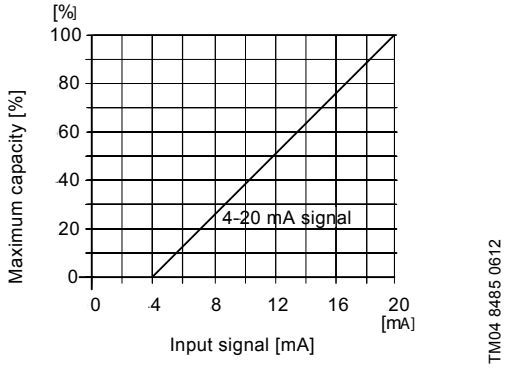

Fig. 8 4-20 mA control

Timer-based batch control

Applies to DME-AR and DME-AP

The set quantity is dosed in batches at maximum capacity or the set capacity limitation.

The time until the first dosing (NX) and the following sequences (IN) can be set in minutes, hours and days. The maximum time limit is 9 days, 23 hours and 59 minutes (9:23:59). The lowest acceptable value is one minute. IN must be higher than the time required to perform one batch. If IN is lower than the time required, the next batch will be ignored.

In case of supply failure, the set dosing quantity, the IN time and the remaining NX time are stored. When the supply is reconnected, the pump starts up with the NX time at the time of the supply failure. Thus, the timer cycle continues, but it will be delayed according to the time of the supply failure.

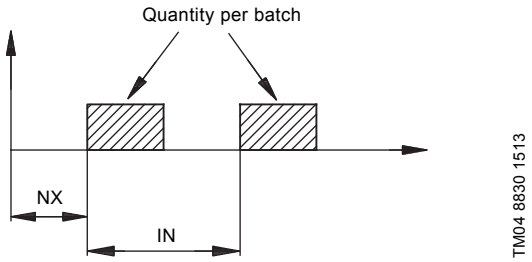

Fig. 9 Timer-based batch control

Setting range

Pump type	Setting range	
	From [ml/batch]	To [l/batch]
DME 60	6.25	120
DME 150	15.6	300
DME 375	39.1	750
DME 940	97.9	1880

Pulse-based batch control

Applies to DME-AR and DME-AP

The set quantity is dosed in batches at maximum capacity or the set capacity limitation. The quantity is dosed every time the pump receives an external pulse. If the pump receives new pulses before the batch is completed, these pulses will be ignored.

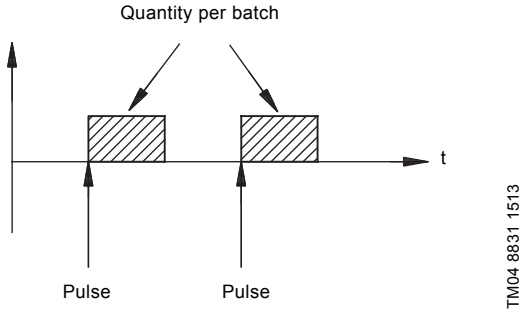

Fig. 10 Pulse-based batch control

Setting range

Pump type	Setting range	
	From [ml/batch]	To [l/batch]
DME 60	6.25	120
DME 150	15.6	300
DME 375	39.1	750
DME 940	97.9	1880

Anti-cavitation

When the anti-cavitation function is selected, the pump extends and smooths its suction stroke. This results in a softer suction stroke.

The anti-cavitation function is used in these situations:

- When pumping high-viscosity liquids
- When pumping degassing liquids
- When the suction line is long
- When the suction lift is high

Depending on the circumstances, the motor speed during the suction stroke can be reduced to approximately 75 %, 50 % or 25 % of the normal motor speed. When using the anti-cavitation function, the maximum pump capacity is reduced.

Maximum capacity limitation

Maximum capacity limitation makes it possible to reduce the maximum capacity (MAX. CAP).
It influences the functions in which the pump normally operates at maximum capacity. Under normal operating conditions, the pump cannot operate at a capacity higher than the one stated in the display. When pushing the maximum capacity button, the pump operates at 100 %.

With the maximum capacity limitation function, a large pump can be set to operate as a much smaller pump. Together with the 1:800 capacity range, this function allows the following:

1. To utilize the smooth and even dosing characteristics of the pump at low capacities to achieve
   – improved chemical mixing
   – improved dosing through long discharge lines
   – improved dosing of high-viscosity liquids.
2. To improve the dosing of gas-containing liquids: In a large pump, the displaced volume (1) is much larger than the non-displaced volume (2).

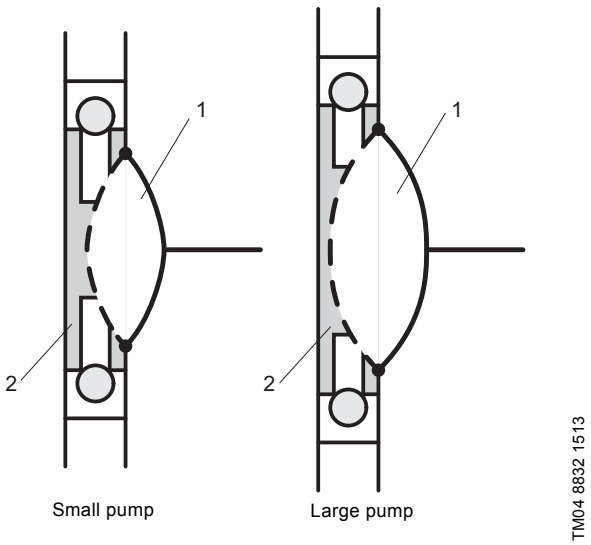

Fig. 11 Anti-cavitation

3. To cover several needs with just one pump size.
4. To adapt the pump to a 4-20 mA signal control with 4 mA corresponding to 0 % and 20 mA to the set maximum capacity.

This allows you to use a DME for dosing a very small quantity of liquid without having to change the input signal.

Example:

A DME 376 receives a 12 mA input signal from a control instrument. According to the analog curve (see page 11), this results in a 50 % output and a capacity of 188 l/h.

A new situation occurs where it is only necessary to dose 47 l/h: The maximum capacity limitation is set to 94 l/h. The pump is still receiving a 12 mA signal resulting in a 50 % output and a capacity of 47 l/h.

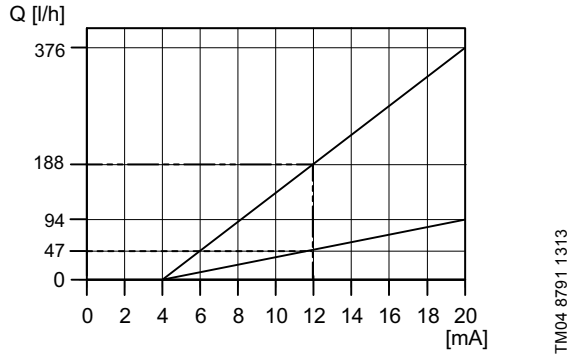

Fig. 12 Maximum capacity limitation

The maximum capacity limitation also reduces the pump speed in timer-based batch control, pulse-based batch control and during calibration where the pump usually operates at maximum capacity.

Calibration

After start-up, the dosing pumps can be calibrated for the actual installation to ensure that the displayed value (millilitres or litres) is correct. A calibration program in the set-up menu facilitates calibration.

Counters

The pump can display non-resettable counters for:

- "Quantity":
  Accumulated dosed quantity in litres or US gallons.
- "Strokes":
  Accumulated number of dosing strokes.
- "Hours":
  Accumulated number of operating hours (power on).
- "Power ON":
  Accumulated number of times the mains supply has been switched on.

Languages

The display text can be displayed in one of the following languages chosen in the set-up menu:

- English, German, French, Italian, Spanish, Portuguese, Dutch, Swedish, Finnish, Danish, Czech, Slovak, Polish, Russian.

Integrated vent valve

The DME dosing pumps are provided with an integrated vent valve (1). The vent valve makes priming during start-up very easy.

The vent valve must be connected to the tank by means of a 15/20 mm PVC hose.

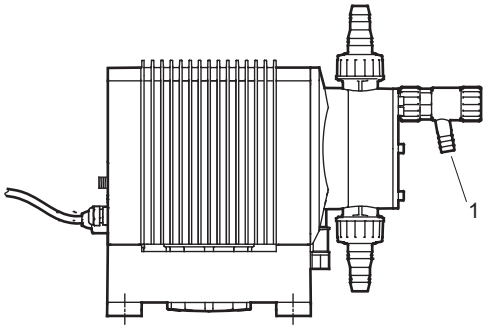

TM04 8486 0612

Fig. 13 Integrated vent valve

Switch-mode power supply

The DME pump incorporates a switch-mode power supply. This makes the pump independent of variations in supply voltage and frequency.

Operating range: 1 x 100-240 V, 50/60 Hz.

Level control

Applies to DME-AR and DME-AP

The pump can be connected to a level control unit for monitoring of the chemical level in the tank. The pump can react to two level sensor signals.

Level sensors	Pump reaction
Upper sensor activated	• Red indicator light is on. • Pump is running. • Alarm relay is activated.★
Lower sensor activated	• Red indicator light is on. • Pump stops. • Alarm relay is activated.★

★ Applies to control variant AR.

Bus communication

The DME-AP is available with a built-in module for bus communication with PROFIBUS DP systems.
This module enables remote monitoring and setting via the fieldbus system.

All DME features are available via bus communication. The PROFIBUS GSD-files can be found on the product CD included in the standard delivery.

Diaphragm leakage sensor

The pump can be fitted with a diaphragm leakage sensor. The sensor is connected to the drain hole of the dosing head. In case of leakage of the diaphragm, the signal from the sensor generates an alarm in the pump, and the alarm relay is activated. When dosing crystallising media, a diaphragm leakage sensor must be installed.

Dosing monitoring

TM04 8790 1313

Fig. 14 Dosing monitor mounted on pump discharge side

The dosing monitor is designed to monitor the dosing of liquids which may cause gas accumulation in the dosing head, thus stopping the dosing process even if the pump is still operating.

During the dosing process, the dosing monitor gives pulse signals to the monitor input so that the pump can compare performed dosing strokes (from internal stroke sensor) with externally measured physical strokes (from dosing monitor). If an external dosing stroke is not measured as a result of the internal dosing stroke, this is considered a fault that may have been provoked by empty tank or gas in the dosing head.

The dosing monitor should be connected to the input for dosing monitoring (pins 4 and 5). This input must be configured for dosing monitoring.

Once the input has been set to dosing monitoring and a dosing monitor has been connected and set, the dosing monitoring function will be active.

Definitions

Correct dosing stroke: A pulse from the dosing monitor corresponds to the internal stroke signal within acceptable time.

Incorrect dosing stroke: There is no pulse from the dosing monitor corresponding to the internal stroke signal within the acceptable time (the pump is not pumping).

Logic

If a number of incorrect dosing strokes are performed, the pump will continue operating, but it will change over to alarm mode. The red indicator light will be on and the alarm output will be activated (variant AR).

When a correct dosing stroke is detected, the red indicator light is turned off and the alarm output is deactivated.

Control panel lock

It is possible to lock the buttons on the control panel to prevent maloperation of the pump. The locking function can be set to ON or OFF. The default setting is OFF.

A PIN code is required to change from OFF to ON. When ON is selected for the first time, the indication "_ _ _ _" appears in the display. If a code has already been entered, the code will appear when an attempt to change to ON is made. This code can either be re-entered or changed.

Units

It is possible to select metric units (litre/millilitre) and US units (gallons/millilitre).

Metric measuring units

- In manual and analog modes, set the quantity to be dosed in litres per hour (l/h) or millilitres per hour (ml/h).
- In pulse mode, set the quantity to be dosed in ml/pulse. The actual capacity is indicated in litres per hour (l/h) or millilitres per hour (ml/h).
- For calibration, set the quantity to be dosed in ml per 100 strokes.
- In timer and batch modes, set the quantity to be dosed in litres (l) or millilitres (ml).

Under the QUANTITY menu item in the COUNTERS menu, the dosed quantity is indicated in litres.

US measuring units

- In manual and analog modes, set the quantity to be dosed in gallons per hour (gph).
- In pulse mode, set the quantity to be dosed in ml/pulse. The actual capacity is shown in gallons per hour (gph).
- For calibration, set the quantity to be dosed in ml per 100 strokes.
- In timer and batch modes, set the quantity to be dosed in gallons.

Under the QUANTITY menu item in the COUNTERS menu, the dosed quantity is indicated in gallons (gal).

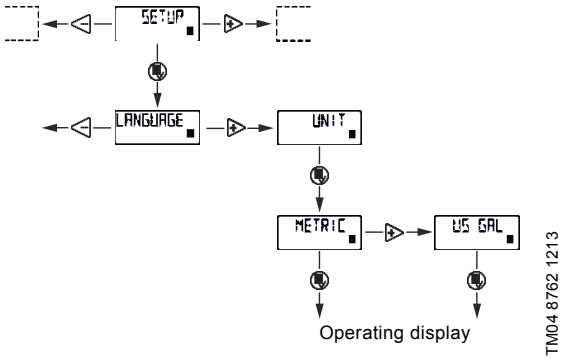

Fig. 15 Possible units settings

Wiring diagram DME-AR

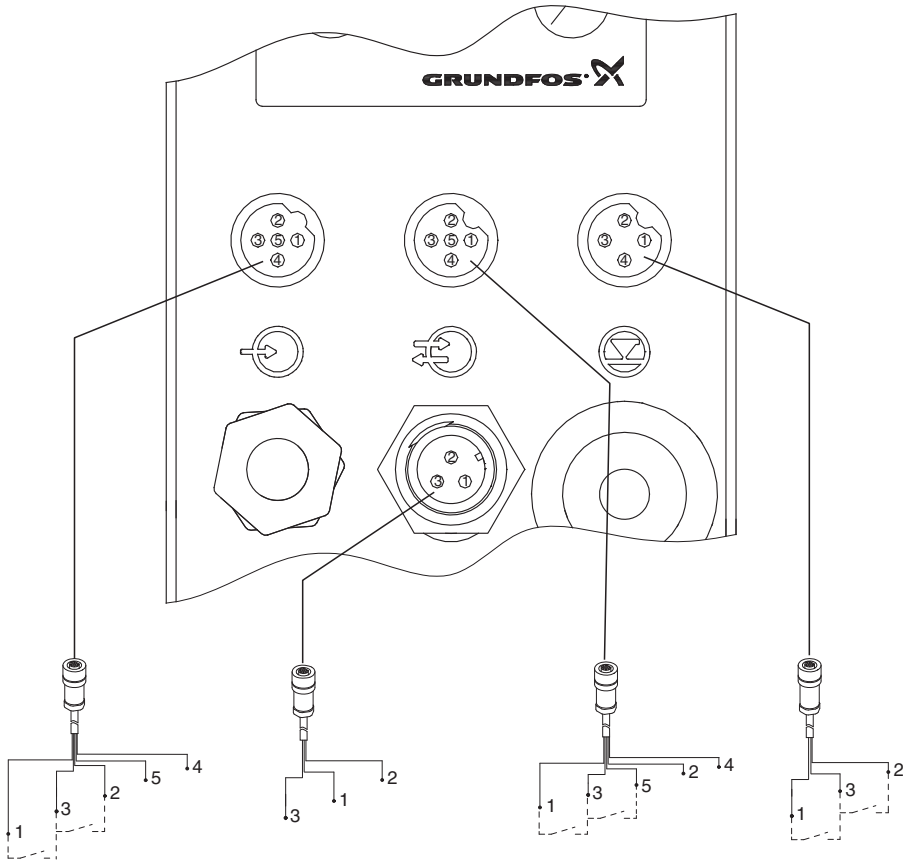

Cable 1	Cable 2	Cable 3	Cable 4
Analog/pulse/leakage sensor	Relay	External stop	Level sensor
Product No.	Product No.	Product No.	Product No.
2 m cable: 96440447	2 m cable: 96534214	2 m cable: 96527109	2 m cable: 96440450
5 m cable: 96440448	5 m cable: 96534215	5 m cable: 96527111	5 m cable: 96440451

TM02 7069 2503

Fig. 16 Wiring diagram DME-AR

Cable 1: Input for analog, pulse and leakage sensor

Function	Pin holes					Plug type
	1/brown	2/white	3/blue, 5 V	4/black	5/grey	
Pulse	X		X			contact
Pulse	5 V			GND		5 VDC
Analog				(-) mA input	(+) mA input	mA signal
Batch	X		X			contact
Batch	5 V			GND		5 VDC
Leakage		X	X			contact
Leakage		5 V		GND		5 VDC

Cable 2: Output for alarm relay

Function	Pin holes		
	1/brown	2/white	3/blue
Alarm relay output NO	X	X	
Alarm relay output NC	X		X

Cable 3: Input for external stop, dosing monitor, output for dosing

Function	Pin holes					Plug type
	1/brown	2/white	3/blue, 5 V	4/black	5/grey	
External stop input	X		X			contact
External stop input	5 V			GND		5 VDC
Dosing monitor input			X		X	contact
Dosing monitor input				GND	5 V	5 VDC
Dosing output (pump running)		open collector★	X	GND		NPN

★ Open collector can be used for a relay or a lamp.

With internal 5 VDC power supply: max. 100 mA

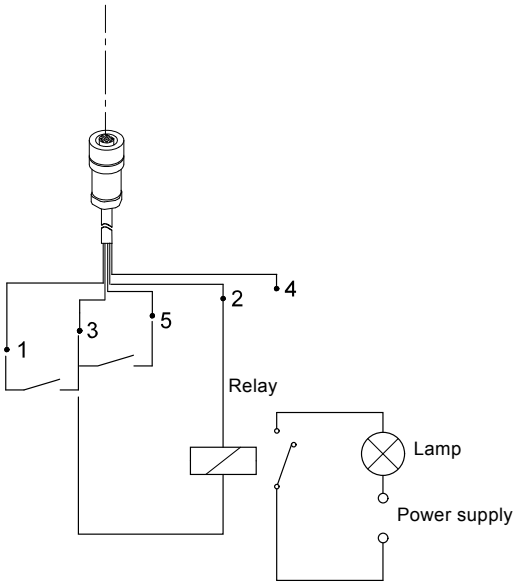

TM03 7868 5006

With external power supply: max. 24 VDC, 100 mA

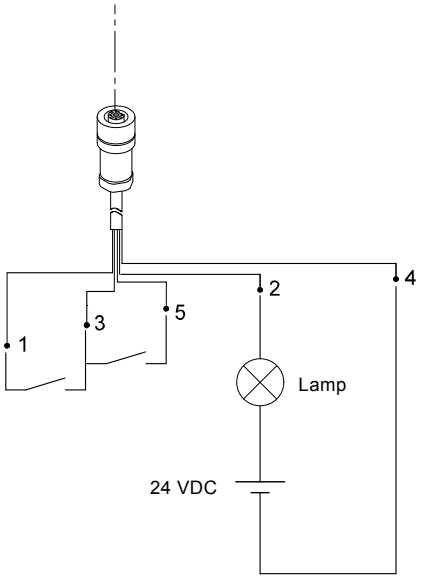

TM03 7869 5006

Cable 4: Input for level sensor

Function	Pin holes					Plug type
	1/brown	2/white	3/blue, 5 V	4/black	5/grey	
Low level	X★		X★			contact
Low level	5 V			GND		5 VDC
Empty tank		X★	X★			contact
Empty tank		5 V		GND		5 VDC

★ The function for the potential-free contact set can be chosen from the display (NO = Normally Open and NC = Normally Closed).

4. Construction

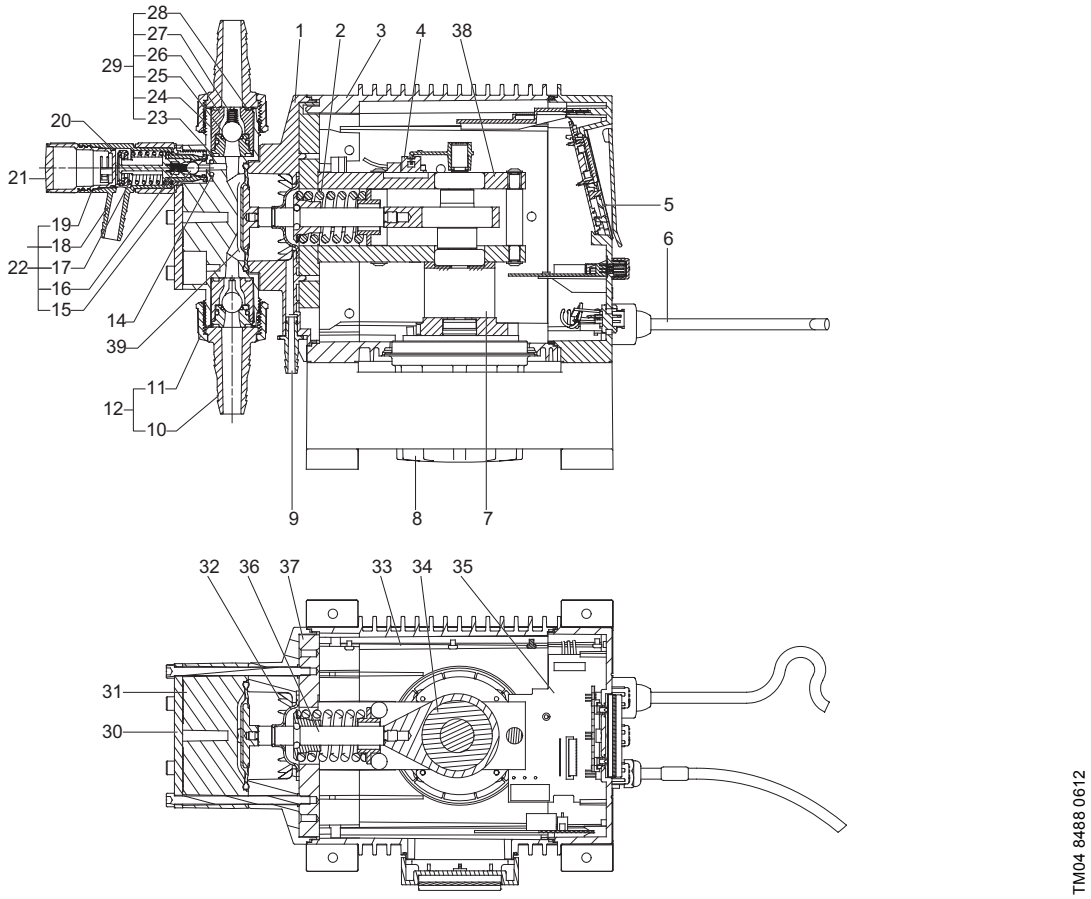

Fig. 17 Sectional drawing

Material specification

Pos.	Description	Material options
1	Back plate	PPE/PS 20 % glass fibre
2	Spring	DIN 17223 TYPE C
3	Housing	PPE/PS 20 % glass fibre
4	Hall sensor	-
5	Operation PCB	-
6	Power cable	Rubber
7	Gear	-
8	Brushless DC motor	-
9	Drain hole or leakage sensor	-
10	DME 60 and DME 150: 19/25 mm hose nozzle	PP/PVDF
	DME 375 and DME 940: connection with internal thread 1 1/4" NPT / Rp 1 1/4	PP/PVDF
11	Union nut	PP/PVDF
12	Connection, complete	-
14	O-ring	EPDM/FKM/PTFE
15	Venting valve, ball	Ceramic
16	Spring	Alloy C-4, 2.4610 (NiMo16CrTi)
17	Spring	Alloy C-4, 2.4610 (NiMo16CrTi)
18	Venting valve, body	PP/PVDF
19	Venting valve, tap	PP/PVDF
20	O-ring	EPDM/FKM/PTFE
21	End cover	Steel
22	Venting valve, complete	-

Pos.	Description	Material options
23	O-ring	EPDM/FKM/PTFE
24	Valve seat	PP/PVDF/SS 1.4401/PTFE
25	Valve ball	Ceramic/Glass/SS 1.4401/ PTFE
26	Valve casing	PP/PVDF/SS 1.4401
27★	Spring	Alloy C-4, 2.4610 (NiMo16CrTi)
28	O-ring	EPDM/FKM/PTFE
29	Valve, complete	-
30★★	Dosing head cover	Steel
31	Dosing head	PP/PVDF/SS 1.4401
32	Safety membrane	-
33	Power PCB	-
34	Crank shaft	Steel
35	I/O PCB	-
36	Connecting rod	Steel
37	Steel plate	Steel
38	Steel frame	Steel
39	Diaphragm	Textile-reinforced EPDM, PTFE-coated

★ The pump is available with spring-loaded valves. Spring material: Alloy C-4, 2.4610 (NiMo16CrTi)

★★ The steel plate is not included in stainless-steel dosing head version.

5. Dimensions

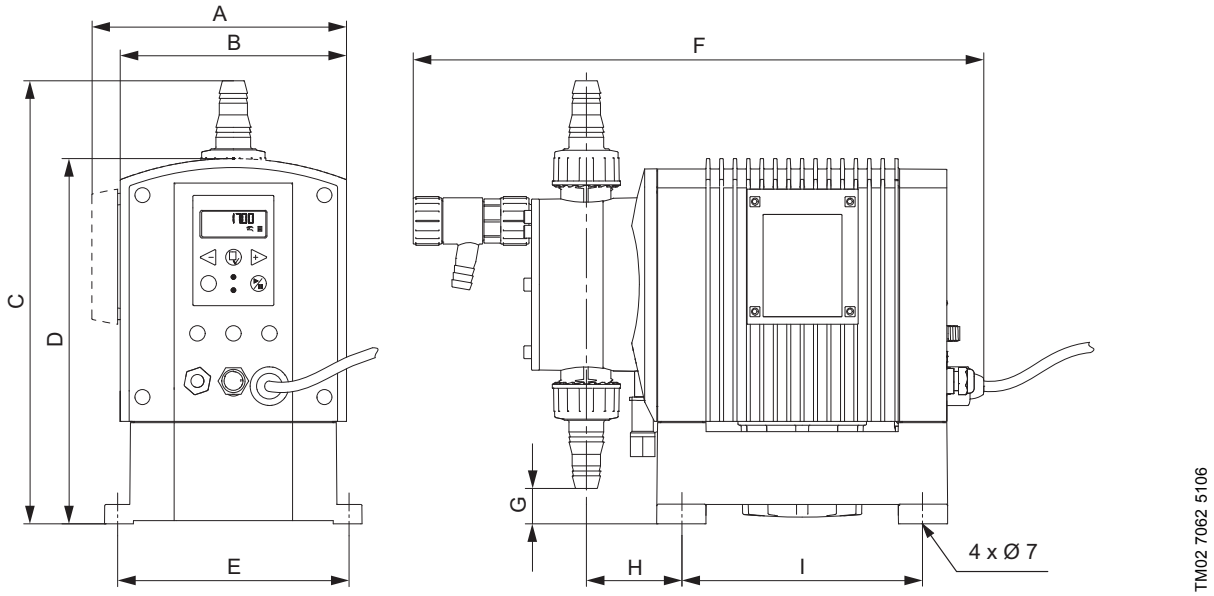

Fig. 18 Dimensions of DME 60 and 150 l/h

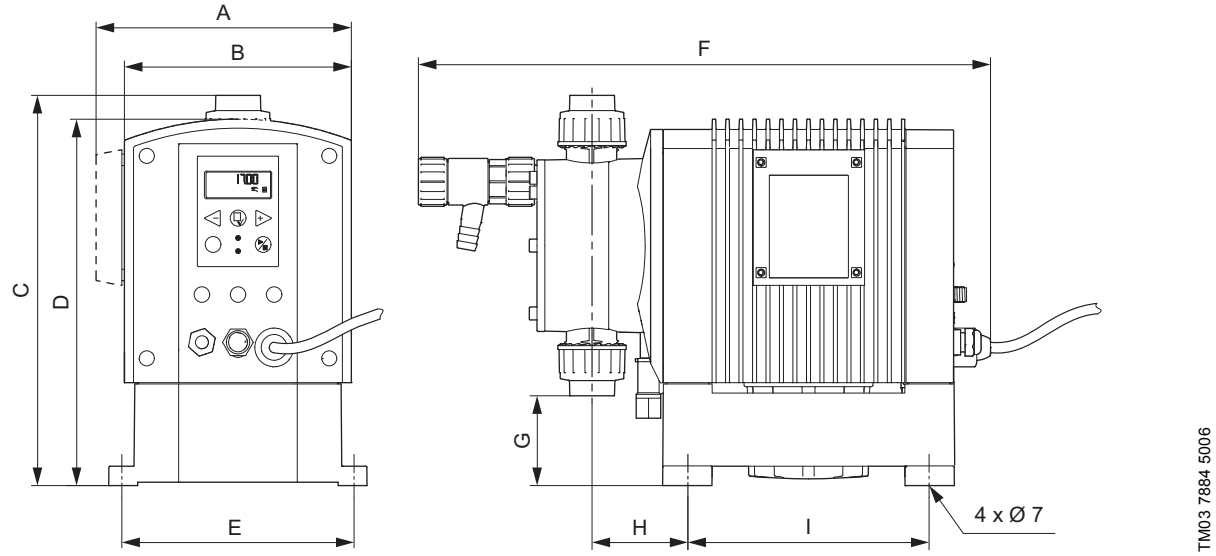

Fig. 19 Dimensions of DME 375 and 940 l/h

Pump type	A [mm]	B [mm]	C [mm]	D [mm]	E [mm]	F [mm]	G [mm]	H [mm]	I [mm]
DME 60	198	176	331	284	180	444	41	74	187
DME 150	198	176	345	284	180	444	28	74	187
DME 375	238	218	410	364	230	543	95	95	246
DME 940	238	218	430	364	230	543	75	95	246

DME 375 and 940 are equipped with 1 1/4" thread connections.

6. Technical data

DME			DME 60	DME 150	DME 375	DME 940
Mechanical data	Maximum capacity	[l/h]	60	150	376	940
	Maximum capacity with anti-cavitation 75 %	[l/h]	45	112	282	705
	Maximum capacity with anti-cavitation 50 % (approx.)	[l/h]	33.4	83.5	210	525
	Maximum capacity with anti-cavitation 25 % (approx.)	[l/h]	16.1	40.4	101	252
	Maximum pressure	[bar]	10	4	10	4
	Maximum stroke frequency	[stroke/min]	160			
	Maximum suction lift during operation	[m]	6			
	Maximum suction lift when priming with wet valves	[m]	1.5			
	Maximum viscosity with spring-loaded valves★	[mPas] (= cP)	3000 mPas at 50 % capacity			
	Maximum viscosity without spring-loaded valves★	[mPas] (= cP)	200			
	Maximum liquid temperature	[°C]	50			
	Minimum liquid temperature	[°C]	0			
	Maximum ambient temperature	[°C]	45			
	Minimum ambient temperature	[°C]	0			
	Accuracy of repeatability		± 1 %			
Weight and size	Weight	[kg]	11.4	11.8	21	22.5
	Diaphragm diameter	[mm]	79	106	124	173
Electrical data	Supply voltage	[VAC]	1 x 100-240 V, 50/60 Hz			
	Maximum current consumption [A]	at 100 V	1.25		2.40	
		at 230 V	0.67		1.0	
	Maximum power consumption P_1	[W]	67.1		240	
	Enclosure class		IP65			
	Insulation class		B			
	Power supply cable	[m]	1.5 H05RN-F with plug			
Signal input	Voltage in level sensor input	[VDC]	5			
	Voltage in pulse input	[VDC]	5			
	Minimum pulse-repetition period	[ms]	3.3			
	Impedance in analog 0/4-20 mA input	[Ω]	250			
	Maximum loop resistance in pulse signal circuit	[Ω]	250			
	Maximum loop resistance in level signal circuit	[Ω]	250			
Signal output	Maximum load of alarm relay output, at ohmic load	[A]	2			
	Maximum voltage, alarm relay output	[V]	42			
Sound pressure level	Maximum sound pressure level	[dB(A)]	70			
Approvals			DME 60-150: CE, cCSAus, GOST DME 375-940: CE, cCSAus, GOST			

★ Maximum suction lift: 1 metre.

7. Pump selection

Standard range

Power supply: 1 x 100-240 V, 50/60 Hz switch-mode
Mains plug: EU
Valves: Single-ball on suction side; single-ball on discharge side

Max. capacity [l/h]	Max. pressure [bar]	Control variant	Materials			Connection★1	Control panel position	Type designation	Product No.
			Dosing head	Gaskets	Valve balls				
60	10	AR	PP	EPDM	Ceramic	19/27 25/34	Front	DME 60-10 AR-PP/E/C-F-31QQF	96524874
							Side	DME 60-10 AR-PP/E/C-S-31QQF	96524879
			PP	FKM	Ceramic	19/27 25/34	Front	DME 60-10 AR-PP/V/C-F-31QQF	96524910
							Side	DME 60-10 AR-PP/V/C-S-31QQF	96524911
			PVDF	FKM	Ceramic	19/27 25/34	Front	DME 60-10 AR-PV/V/C-F-31QQF	96524912
							Side	DME 60-10 AR-PV/V/C-S-31QQF	96524913
			SS	PTFE	SS 1.4401	Rp 3/4	Front	DME 60-10 AR-SS/T/SS-F-31A1A1F	97503509
							Side	DME 60-10 AR-SS/T/SS-S-31A1A1F	97503521
60	10	B★2	PP	EPDM	Ceramic	19/27 25/34	Front	DME 60-10 B-PP/E/C-F-31QQF	96524916
							Side	DME 60-10 B-PP/E/C-S-31QQF	96524917
			PP	FKM	Ceramic	19/27 25/34	Front	DME 60-10 B-PP/V/C-F-31QQF	96524918
							Side	DME 60-10 B-PP/V/C-S-31QQF	96524919
			PVDF	FKM	Ceramic	19/27 25/34	Front	DME 60-10 B-PV/V/C-F-31QQF	96524920
							Side	DME 60-10 B-PV/V/C-S-31QQF	96524921
			SS	PTFE	SS 1.4401	Rp 3/4	Front	DME 60-10 B-SS/T/SS-F-31A1A1F	97503522
							Side	DME 60-10 B-SS/T/SS-S-31A1A1F	97503523
150	4	AR	PP	EPDM	Ceramic	19/27 25/34	Front	DME 150-4 AR-PP/E/C-F-31QQF	96524925
							Side	DME 150-4 AR-PP/E/C-S-31QQF	96524926
			PP	FKM	Ceramic	19/27 25/34	Front	DME 150-4 AR-PP/V/C-F-31QQF	96524927
							Side	DME 150-4 AR-PP/V/C-S-31QQF	96524928
			PVDF	FKM	Ceramic	19/27 25/34	Front	DME 150-4 AR-PV/V/C-F-31QQF	96524929
							Side	DME 150-4 AR-PV/V/C-S-31QQF	96524930
			SS	PTFE	SS 1.4401	Rp 3/4	Front	DME 150-4 AR-SS/T/SS-F-31A1A1F	96987376
							Side	DME 150-4 AR-SS/T/SS-S-31A1A1F	97503525
150	4	B★2	PP	EPDM	Ceramic	19/27 25/34	Front	DME 150-4 B-PP/E/C-F-31QQF	96524933
							Side	DME 150-4 B-PP/E/C-S-31QQF	96524934
			PP	FKM	Ceramic	19/27 25/34	Front	DME 150-4 B-PP/V/C-F-31QQF	96524935
							Side	DME 150-4 B-PP/V/C-S-31QQF	96524936
			PVDF	FKM	Ceramic	19/27 25/34	Front	DME 150-4 B-PV/V/C-F-31QQF	96524937
							Side	DME 150-4 B-PV/V/C-S-31QQF	96524938
			SS	PTFE	SS 1.4401	Rp 3/4	Front	DME 150-4 B-SS/T/SS-F-31A1A1F	97503526
							Side	DME 150-4 B-SS/T/SS-S-31A1A1F	97503529
376	10	AR	PP	EPDM	Glass	Rp 1 1/4	Front	DME 375-10 AR-PP/E/G-F-31A2A2F	96524941
							Side	DME 375-10 AR-PP/E/G-S-31A2A2F	96524942
			PP	FKM	Glass	Rp 1 1/4	Front	DME 375-10 AR-PP/V/G-F-31A2A2F	96524943
							Side	DME 375-10 AR-PP/V/G-S-31A2A2F	96524944
			PVDF	FKM	Glass	Rp 1 1/4	Front	DME 375-10 AR-PV/V/G-F-31A2A2F	96524945
							Side	DME 375-10 AR-PV/V/G-S-31A2A2F	96524946
			SS	PTFE	SS 1.4401	Rp 1 1/4	Front	DME 375-10 AR-SS/T/SS-F-31A2A2F	96987377
							Side	DME 375-10 AR-SS/T/SS-S-31A2A2F	97503530
376	10	B★2	PP	EPDM	Glass	Rp 1 1/4	Front	DME 375-10 B-PP/E/G-F-31A2A2F	96524949
							Side	DME 375-10 B-PP/E/G-S-31A2A2F	96524950
			PP	FKM	Glass	Rp 1 1/4	Front	DME 375-10 B-PP/V/G-F-31A2A2F	96524951
							Side	DME 375-10 B-PP/V/G-S-31A2A2F	96524952
			PVDF	FKM	Glass	Rp 1 1/4	Front	DME 375-10 B-PV/V/G-F-31A2A2F	96524953
							Side	DME 375-10 B-PV/V/G-S-31A2A2F	96524954
			SS	PTFE	SS 1.4401	Rp 1 1/4	Front	DME 375-10 B-SS/T/SS-F-31A2A2F	97503531
							Side	DME 375-10 B-SS/T/SS-S-31A2A2F	97503532
940	4	AR	PP	EPDM	Glass	Rp 1 1/4	Front	DME 940-4 AR-PP/E/G-F-31A2A2F	96524958
							Side	DME 940-4 AR-PP/E/G-S-31A2A2F	96524959
			PP	FKM	Glass	Rp 1 1/4	Front	DME 940-4 AR-PP/V/G-F-31A2A2F	96524960
							Side	DME 940-4 AR-PP/V/G-S-31A2A2F	96524961
			PVDF	FKM	Glass	Rp 1 1/4	Front	DME 940-4 AR-PV/V/G-F-31A2A2F	96524962
							Side	DME 940-4 AR-PV/V/G-S-31A2A2F	96524963
			SS	PTFE	SS 1.4401	Rp 1 1/4	Front	DME 940-4 AR-SS/T/SS-F-31A2A2F	97503533
							Side	DME 940-4 AR-SS/T/SS-S-31A2A2F	97503534

Max. capacity [l/h]	Max. pressure [bar]	Control variant	Materials			Connection★1	Control panel position	Type designation	Product No.
			Dosing head	Gaskets	Valve balls				
940	4	B★2	PP	EPDM	Glass	Rp 1 1/4	Front	DME 940-4 B-PP/E/G-F-31A2A2F	96524966
							Side	DME 940-4 B-PP/E/G-S-31A2A2F	96524967
			PP	FKM	Glass	Rp 1 1/4	Front	DME 940-4 B-PP/V/G-F-31A2A2F	96524968
							Side	DME 940-4 B-PP/V/G-S-31A2A2F	96524969
			PVDF	FKM	Glass	Rp 1 1/4	Front	DME 940-4 B-PV/V/G-F-31A2A2F	96524980
							Side	DME 940-4 B-PV/V/G-S-31A2A2F	96524981
			SS	PTFE	SS 1.4401	Rp 1 1/4	Front	DME 940-4 B-SS/T/SS-F-31A2A2F	97503537
							Side	DME 940-4 B-SS/T/SS-S-31A2A2F	97503538

★1 19/27 and 25/34 are inner/outer hose diameters in mm for hose clamp connectors. Rp 3/4 and Rp 1 1/4 connections have internal thread for pipe connection.

★2 DME-B is not suitable for crystallising media.

Non-standard range

Maximum capacity - pressure		[l/h]-[bar]	DME 60-10: 60 l/h - 10 bar; DME 150-4: 150 l/h - 4 bar; DME 375-10: 375 l/h - 10 bar; DME 940-4: 940 l/h - 4 bar
Control variant		B:	Basic
		AR:	Standard
		AP:	Standard + Profibus
Material	**Dosing head**	PP:	Polypropylene
		PV:	PVDF
		SS:	Stainless steel 1.4401
	Gaskets	E:	EPDM
		V:	FKM
		T:	PTFE
	Valve balls	C:	Ceramic
		SS:	Stainless steel 1.4401
		G:	Glass
		T:	PTFE
Control panel position		F:	Front
		S:	Side
Voltage		3:	1 x 100-240 V, 50/60 Hz
Valve type		1:	Standard
		2:	Spring-loaded
Connection suction/discharge		Q:	19/27+ 25/34 mm
		A1:	Threaded, Rp 3/4
		A2:	Threaded, Rp 1 1/4
		A3:	Threaded, 3/4" NPT
		A4:	Threaded, 1 1/4" NPT
Mains plug		F:	EU
		B:	USA, Canada
		G:	UK
		I:	Australia
		E:	Switzerland
		J:	Japan
		L:	Argentina

DME	**Control variant**	**Materials**			**Control panel position**	**Voltage**	**Valve type**	**Connection suction/discharge**	**Mains plug**
		Head	**Gaskets**	**Balls**					
60-10 150-4	B AR AP	PP	E V	C SS	-F- -S-	3	1 2	QQ A1A1 A3A3	F B G I E J L
		PV	E V T						
		SS	E V T	SS					
375-10 940-4	B AR AP	PP	E V	C G SS	-F- -S-	3	1 2	A2A2 A4A4	
		PV	E V	C G SS					
			T	C G SS T					
		SS	E V T	SS					

8. Pumped liquids

The resistance table below is intended as a general guide for material resistance (at room temperature), and does not replace testing of the chemicals and pump materials under specific working conditions.

The data shown are based on information from various sources available, but many factors (purity, temperature, abrasive particles, etc.) may affect the chemical resistance of a given material.

Note: Some of the liquids in this table may be toxic, corrosive or hazardous. Please be careful when handling these liquids.

Pumped liquid (20 °C)			Materials						
			Dosing head			Gasket			Ball
Description	**Chemical formula**	**Concentration [%]**	**PP**	**PVDF**	**SS 1.4401**	**FKM**	**EPDM**	**PTFE**	**Ceramic**
Acetic acid	CH_3COOH	25	●	●	●	-	●	●	●
		60	●	●	●	-	❍	●	●
		85	●	●	●	-	-	●	●
Aluminium chloride	$AlCl_3$	40	●	●	-	●	●	●	●
Aluminium sulphate	$Al_2(SO_4)_3$	60	●	●	●	●	●	●	●
Ammonia, aqueous	NH_4OH	28	●	●	●	-	●	●	●
Calcium hydroxide★7	$Ca(OH)_2$		●	●	●	●	●	●	●
Calcium hypochlorite	$Ca(OCl)_2$	20	❍	●	-	●	●	●	●
Chromic acid★5	H_2CrO_4	10	●	●	●	●	●	●	●
		30	-	●	-	●	❍	●	●
		40	-	●	-	●	-	●	●
		50	-	●	-	●	-	●	●
Copper sulphate	$CuSO_4$	30	●	●	●	●	●	●	●
Ferric chloride★3	$FeCl_3$	60	●	●	-	●	●	●	●
Ferric sulphate★3	$Fe_2(SO_4)_3$	60	●	●	●	●	●	●	●
Ferrous chloride	$FeCl_2$	40	●	●	-	●	●	●	●
Ferrous sulphate	$FeSO_4$	50	●	●	●	●	●	●	●
Hydrochloric acid	HCl	< 25	●	●	-	❍	●	●	●
		25-37	●	●	-	-	●	●	●
Hydrogen peroxide	H_2O_2	30	●	●	●	●	●	●	●
Nitric acid	HNO_3	10	●	●	●	●	●	●	●
		30	●	●	●	●	●	●	●
		40	❍	●	●	●	●	●	●
		70	-	●	●	●	-	●	●
Peracetic acid	CH_3COOOH	5	●	●	-	-	●	●	●
Potassium hydroxide	KOH	50	●	-	●	-	●	●	●
Potassium permanganate	$KMnO_4$	10	●	●	●	-	●	●	●
Sodium chlorate	$NaClO_3$	30	●	●	●	❍	●	●	●
Sodium chloride	NaCl	30	●	●	-	●	●	●	●
Sodium chlorite	$NaClO_2$	20	●	❍	-	●	●	●	●
Sodium hydroxide	NaOH	20	●	❍	●	●	●	●	●
		30	●	-	●	●	●	●	●
		50	●	-	●	●	●	●	●
Sodium hypochlorite	NaOCl	20	❍	●	-	●	●	●	●
Sodium sulphide	Na_2S	30	●	●	●	●	●	●	●
Sodium sulphite★6	Na_2SO_3	20	●	●	●	●	●	●	●
Sulphurous acid	H_2SO_3	6	●	●	●	●	●	●	●
Sulphuric acid★4	H_2SO_4	< 80	●	●	-	●	❍	●	●
		80-98	❍	●	-	●	-	●	●

● Resistant

❍ Limited resistance

- Not resistant

★3 Risk of crystallisation. DME-B is not suitable for crystallising media.

★4 Reacts violently with water and generates much heat. (Pump should be absolutely dry before dosing sulphuric acid.)

★5 Must be fluoride-free when glass balls are used.

★6 In neutral solutions.

★7 Saturated solution 0.1 %.

For further information, see "Pumped Liquid Guide".

9. Further product information

WebCAPS

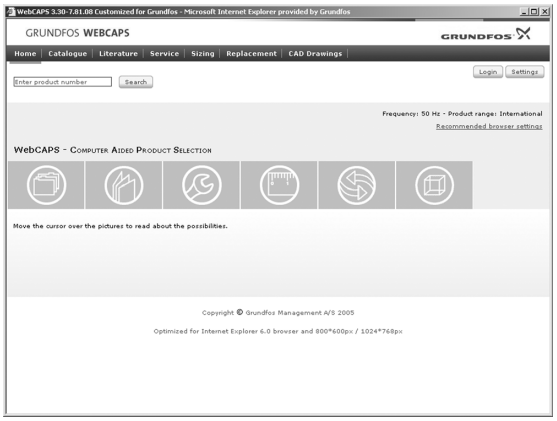

WebCAPS is a **Web**-based **C**omputer **A**ided **P**roduct **S**election program available on www.grundfos.com.

WebCAPS contains detailed information on more than 220,000 Grundfos products in more than 30 languages.

Information in WebCAPS is divided into six sections:

- Catalogue
- Literature
- Service
- Sizing
- Replacement
- CAD drawings.

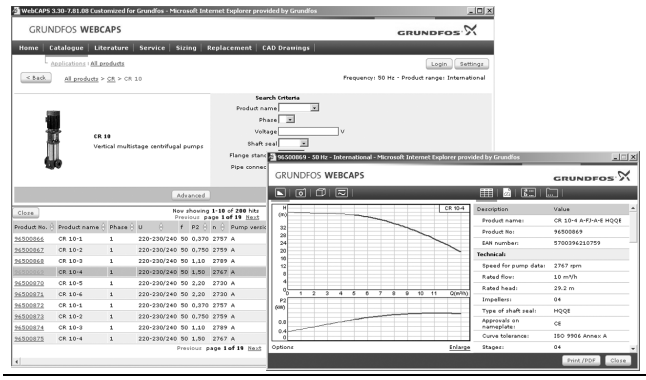

Catalogue

Based on fields of application and pump types, this section contains the following:

- technical data
- curves (QH, Eta, P1, P2, etc.) which can be adapted to the density and viscosity of the pumped liquid and show the number of pumps in operation
- product photos
- dimensional drawings
- wiring diagrams
- quotation texts, etc.

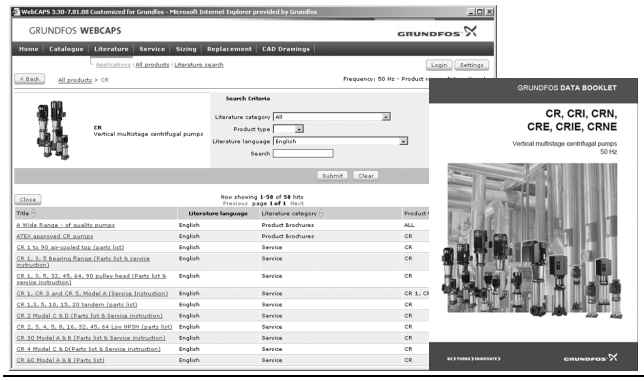

Literature

This section contains all the latest documents of a given pump, such as

- data booklets
- installation and operating instructions
- service documentation, such as Service kit catalogue and Service kit instructions
- quick guides
- product brochures.

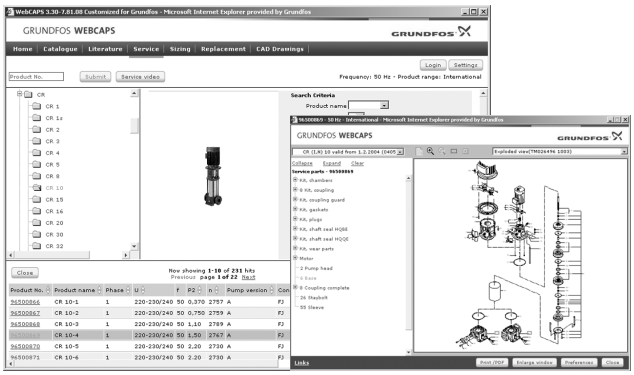

Service

This section contains an easy-to-use interactive service catalogue. Here you can find and identify service parts of both existing and discontinued Grundfos pumps.
Furthermore, the section contains service videos showing you how to replace service parts.

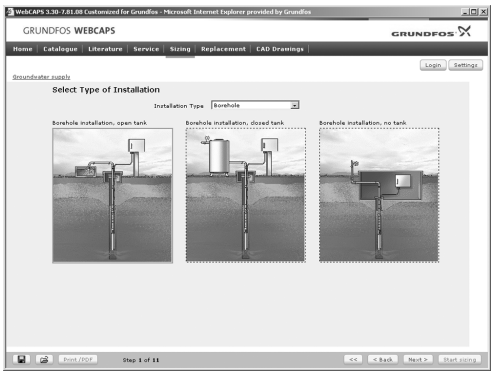

Sizing

This section is based on different fields of application and installation examples and gives easy step-by-step instructions in how to size a product:

- Select the most suitable and efficient pump for your installation.
- Carry out advanced calculations based on energy, consumption, payback periods, load profiles, life cycle costs, etc.
- Analyse your selected pump via the built-in life cycle cost tool.
- Determine the flow velocity in wastewater applications, etc.

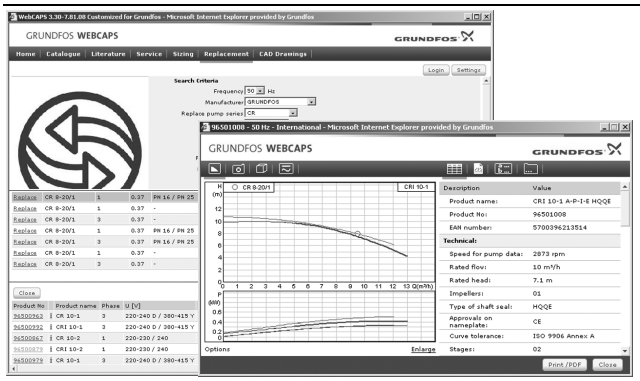

Replacement

In this section you find a guide to selecting and comparing replacement data of an installed pump in order to replace the pump with a more efficient Grundfos pump.
The section contains replacement data of a wide range of pumps produced by other manufacturers than Grundfos.

Based on an easy step-by-step guide, you can compare Grundfos pumps with the one you have installed on your site. When you have specified the installed pump, the guide will suggest a number of Grundfos pumps which can improve both comfort and efficiency.

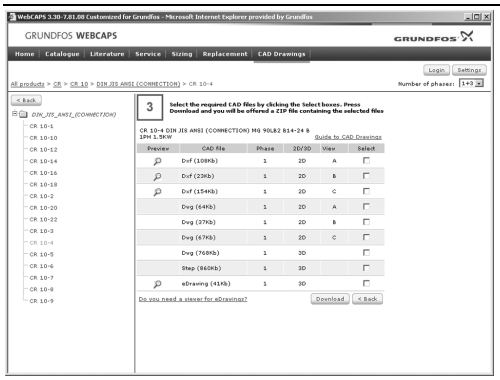

CAD drawings

In this section, it is possible to download 2-dimensional (2D) and 3-dimensional (3D) CAD drawings of most Grundfos pumps.

These formats are available in WebCAPS:

2-dimensional drawings:
- .dxf, wireframe drawings
- .dwg, wireframe drawings.

3-dimensional drawings:
- .dwg, wireframe drawings (without surfaces)
- .stp, solid drawings (with surfaces)
- .eprt, E-drawings.

WinCAPS

Fig. 20 WinCAPS DVD

WinCAPS is a **Win**dows-based **C**omputer **A**ided **P**roduct **S**election program containing detailed information on more than 220,000 Grundfos products in more than 30 languages.

The program contains the same features and functions as WebCAPS, but is an ideal solution if no internet connection is available.

WinCAPS is available on DVD and updated once a year.

GO CAPS

Mobile solution for professionals on the GO!

CAPS functionality on the mobile workplace.

Available on the App Store

Subject to alterations.

be think innovate

© Copyright Grundfos Holding A/S

The name Grundfos, the Grundfos logo, and **be think innovate** are registered trademarks owned by Grundfos Holding A/S or Grundfos A/S, Denmark. All rights reserved worldwide.

98455369 0614

ECM: 1136455

GRUNDFOS A/S
DK-8850 Bjerringbro . Denmark
Telephone: +45 87 50 14 00
www.grundfos.com

GRUNDFOS