RX Series

Premix Gas Burners

Focus On

www.riello.com

Energy For Life

Index

Introduction

Riello Burners, world-wide leader in the production and commercialisation of burners, has been designing and manufacturing for almost 90 years, with vanguard technologies aimed to continuous innovation.
Across the years, Riello Burners has gained the position of absolute leader in the world of residential, commercial and industrial burners, using technologies aimed to reduce consumption and caring for the environment.
Now Riello Burners offers a complete series of burners, integrally designed on the basis of revolutionary Premix technology.
The premix gas burner is the technological frontier, able to satisfy the requirements of high modulating turn down ratios and low polluting emissions, representing the ideal answer for the condensing applications and industrial processes.

Riello Burners RX Series

Riello Burners RX gas burner series, completely designed and developed by Riello Burners for premix combustion technology, is the best answer to low polluting emissions and it allows to achieve high modulating turn down ratios. The RX series burner operation can be "two stages progressive" or alternatively "modulating". The RX series burners electronic controls are designed with modular concept in order to offer a highly flexible configuration dependant on the application.

There are nine standard available models based on three different structures:

BURNER	INPUT			
Model	Low Fire	High Fire N0x < 30 ppm	High Fire N0x < 20 ppm	High Fire N0x < 9 ppm
	Btu/hr	Btu/hr	Btu/hr	Btu/hr
RX 150 S/PV	80.000	339.000	399.000	399.000
		550.000	530.000	500.000

BURNER	INPUT			
Model	Low Fire	High Fire N0x < 30 ppm	High Fire N0x < 20 ppm	High Fire N0x < 9 ppm
	Btu/hr	Btu/hr	Btu/hr	Btu/hr
RX 250 S/PV	150.000	800.000	760.000	700.000
RX 300 S/PV	160.000	1.100.000	1.060.000	975.000
RX 300-33 S/PV	180.000	1.220.000	1.175.000	1.080.000

BURNER	INPUT			
Model	Low Fire	High Fire N0x < 30 ppm	High Fire N0x < 20 ppm	High Fire N0x < 9 ppm
	Btu/hr	Btu/hr	Btu/hr	Btu/hr
RX 400 S/PV	300.000	1.100.000	1.100.000	1.100.000
		1.700.000	1.660.000	1.550.000
RX 500 S/PV	350.000	2.150.000	2.080.000	1.950.000

BURNER (*)	INPUT			
Model	Low Fire	High Fire N0x < 30 ppm	High Fire N0x < 20 ppm	High Fire N0x < 9 ppm
	Btu/hr	Btu/hr	Btu/hr	Btu/hr
RX 700 S/PV	450.020	2.500.000	2.400.000	2.250.000
RX 850 S/PV	550.000	3.300.000	3.150.000	2.950.000
RX 1000 S/PV	650.000	4.000.000	3.850.000	3.600.000

(*) New with pilot ignition (patented)

On demand we can realize RX custom burners.

OVERALL DIMENSIONS (INCHES)

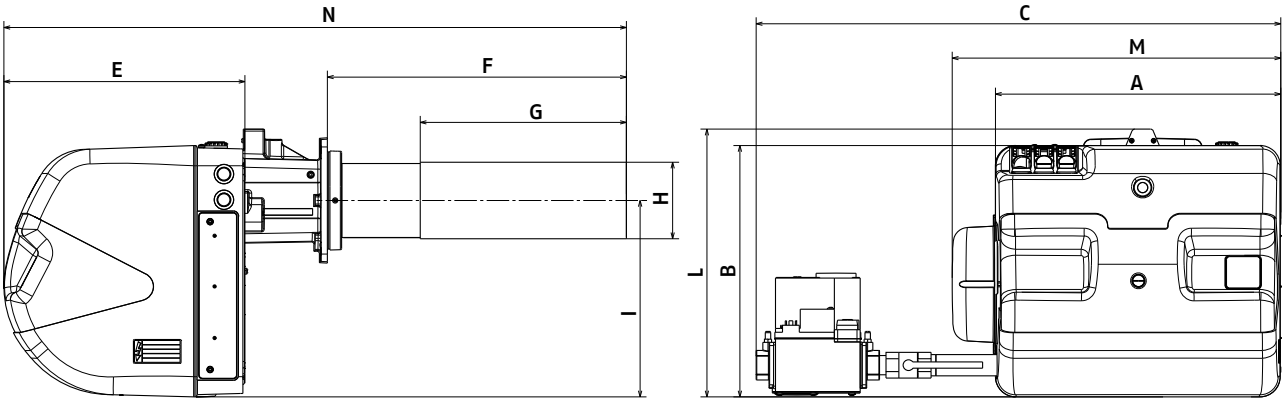

	A	B	C	E	F	G	H	I	L	M	N
RX 150	14 37/64"	13 1/4"	30	12 1/2"	15 7/16"	10 7/16"	3 5/16"	9 25/32"	14 19/64"	-	28 27/64"
RX 250	17 7/16"	15 25/64"	32 1/16"	14 47/64"	18 17/64"	12 19/32"	4 11/16"	12 1/32"	16 25/64"	20 5/64"	38 3/64"
RX 300	17 7/16"	15 25/64"	32 1/16"	14 47/64"	18 17/64"	12 19/32"	4 11/16"	12 1/32"	16 25/64"	20 5/64"	38 3/64"
RX 300-33	17 7/16"	15 25/64"	32 1/16"	14 47/64"	18 17/64"	12 19/32"	4 11/16"	12 1/32"	16 25/64"	20 5/64"	38 3/64"
RX 400	18 45/64"	36 3/4"	36 3/4"	16 35/64"	22 23/32"	16 9/64"	5 43/64"	13 29/32"	5 1/8"	2 7/16"	44 21/64"
RX 500	18 45/64	36 3/4"	28 3/4"	16 35/64"	25 5/64"	18 1/2"	4 43/64	12 29/32	5 1/8"	5 1/8"	46 47/64
RX 700	25 63/64	19 19/64	35 53/64	20 15/32	21 1/4	14 29/64	7 7/8	14 9/16	-	25 63/64"	47 1/16"
RX 850	25 63/64	19 19/64	35 53/64	20 15/32	25 63/64	18 7/64	7 7/8	14 9/16	-	25 63/64"	51 13/16"
RX 1000	25 63/64	19 19/64	35 53/64	20 15/32	25 63/64	18 7/64	7 7/8	14 9/16	-	25 63/64"	51 13/16"

BURNER - BOILER MOUNTING FLANGE (INCHES)

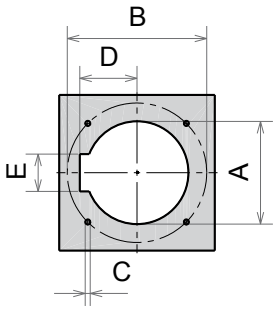

	A	B	C	D	E
RX 150	5 29/32"	6 45/64"- 7 31/64"	13/32"	-	-
RX 250	6 27/64"	8 53/64"	13/32"	3 15/16"	2 11/16"
RX 300	6 27/64"	8 53/64"	13/32"	3 15/16"	2 11/16"
RX 300-33	6 27/64"	8 53/64"	13/32"	3 15/16"	2 11/16"
RX 400	6 27/64"	8 53/64"	13/32"	3 15/16"	2 11/16"
RX 500	6 27/64"	8 53/64"	13/32"	3 15/16"	2 11/16"
RX 700	8 21/32"	12 51/64"- 10 53/64"	13/32"	5 5/16"	2 61/64"
RX 850	8 21/32"	12 51/64"- 10 53/64"	13/32"	5 5/16"	2 61/64"
RX 1000	8 21/32"	12 51/64"- 10 53/64"	13/32"	5 5/16"	2 61/64"

DESIGNATION OF SERIES

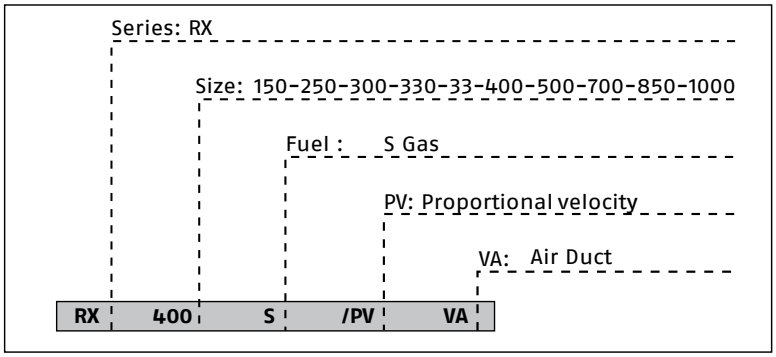

Premix Technology

The main differences between a traditional pressure jet burner and a premix burner are in the ways in which air-gas combustion mixture is achived and in the technology of the combustion head. In pressure jet burners the gas and the combustion air are mixed at the end of the combustion head through special devices: the flame is located at the outlet of combustion head with diffusion in the space available in the combustion chamber. The volume of the flame depends on the power output.

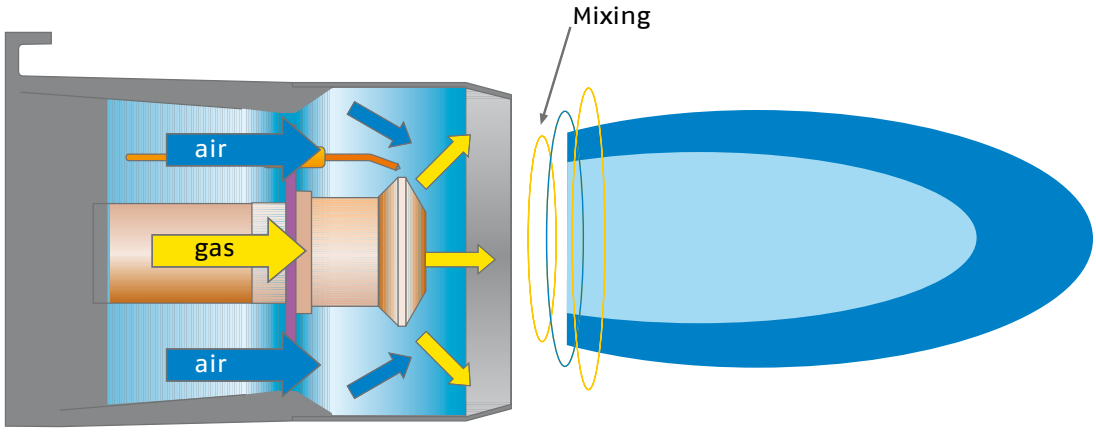

In premix burners the gas and air is delivered into the fan simultaneously and the mixing occurs inside the aspiration circuit. It is obviously necessary to use an airtight ventilation structure to avoid air-gas leaks.

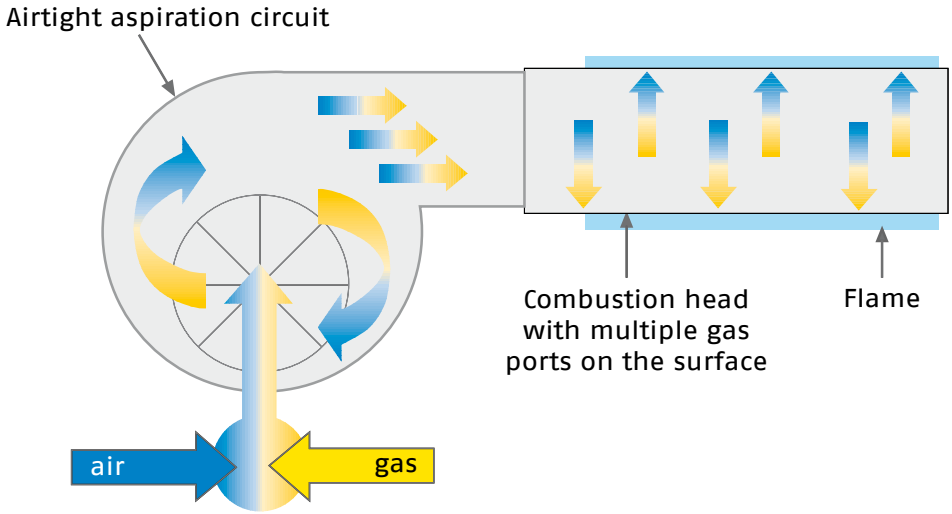

Premix air-gas mixing example with airtight aspiration circuit

The mixture flows subsequently inside the combustion head and through precision ports exits to the external side of combustion head where ignition occurs and so the flame is established. The flame develops only on the external surface of the combustion head and so its dimension is practically the same as the combustion head itself. The RX series, due to this mixing, allows extremely low emissions to meet the increasingly stringent demands for low environmental impact products.

Special Component for RX Burners

Combustion Head

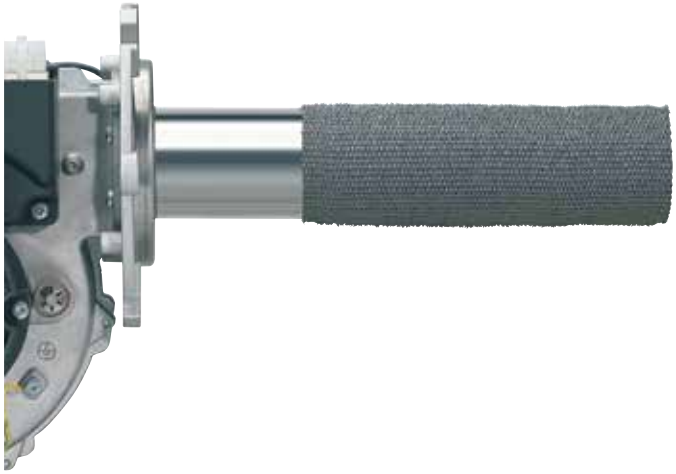

The air-gas mixture is delivered inside the combustion head, called also support, through the ports, this mixture moves to the external side of the combustion head where ignition occurs through spark generation to an electrode.
The geometry of the gas ports has been designed specifically to ensure that throughout the modulation range the speed of the air/gas mixture is higher than the one of a return flame, thus avoiding any potentially dangerous conditions.

Seamless knitted wire detail

The metallic sock is specifically designed and manufactured using a special alloy built with elements that optimize the resistance to thermal stress. It is the fundamental element of a premix burner that improves the performance and longevity of the combustion head.
The seamless knitted wire is manufactured into a unique patented "sock", that allows its application around the support without any welded seams. Thus critical situations to components caused from thermal stress, are eliminated.
To develop the premix combustion head many tests have been carried out, in collaboration with the "Material engineering" department of a prestigious university. In reliability tests, the material resistance and manufacturing processes have been confirmed.

The application of the metallic sock results in many advantages and improved performance:

- High combustion intensity. The combustion head of RX burners can normally work with combustion intensity of 1.5 Btu/(s in^2) compared to medium market values of about 0.6 Btu/(s in^2). This allows the burner to function with a compact head.
- The flame developed on the surface of the combustion head is perfectly attached to the support even at maximum output. Also the risk to have a return of the flame (light back) at minimum output is also avoided. This feature reduces the likelihood of any contact of the flame with the combustion chamber walls, preventing incorrect combustion and chamber hot spots or localised boiling phenomenon that can occur inside a boiler body. The compact shape of a premix flame allows for a reduction in dimensions of the combustion chamber, which can be specifically designed to take advantage of this feature.
- Thermal exchange increases for irradiation, in particularly at minimum power. This is very important because during its life cycle a combustion device operates most of time at medium power (about 70% of maximum load).
- Reduction of flame noise. Therefore the chimney noise is also reduced with advantages for comfort, especially applicable for residential applications in built-up areas.
- High turn down ratio, typically 7:1. Turn down ratio is achieved without the need for complex combustion head adjustments.
- Opportunity to work without changes with LPG (Liquid Petrol Gas)

The models with output power over 550 MBtu/hr are equipped with a Resonance Reduction Device, RRD, that reduces all the possible resonance phenomena. So these models can be matched to various combustion chambers and so to be very flexible during matching activities.
To reach the greater turn down ratio the RX burners are equipped with an innovative device, patented by Riello, that allows to partially reduce the flame surface obtaining very low power output avoiding any risk of flame instability.

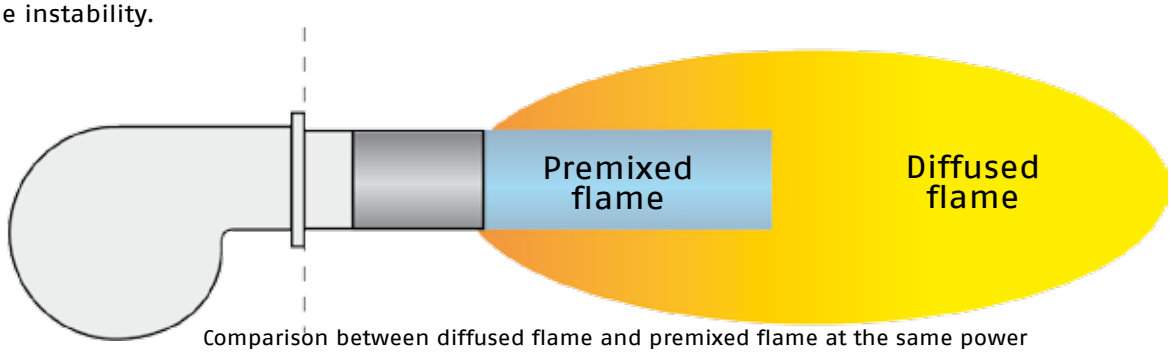

Comparison between diffused flame and premixed flame at the same power

Example of combustion (view from boiler inspection window)

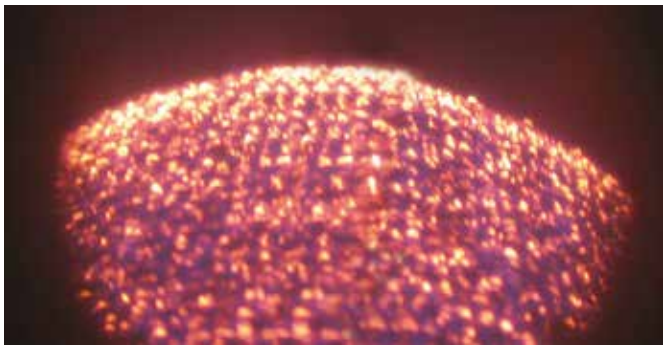
Minimum modulation

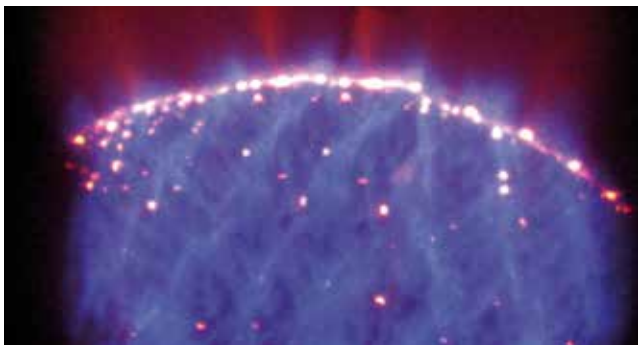
Maximum modulation

RX 150 - RX 250 - RX 300 - RX 330-33 - RX 400 - RX 500

Fan and Brushless Motor

The RX series are equipped with a centrifugal fan designed with a profile that guarantees high performance, low sound emissions and optimizes speed variation. The fan of RX 150 is made up of special polymer and the ones of the other models are made up of a particular steel alloy.
All RX burners are fitted with brushless motors. This motor is very advantageous because it has high efficiency for optimization of power consumption, motor speed variation to achieve the greatest power output control and lower dimension than an induction motor. Brushless means low power consumption, modulation of the load, small size and low noise.

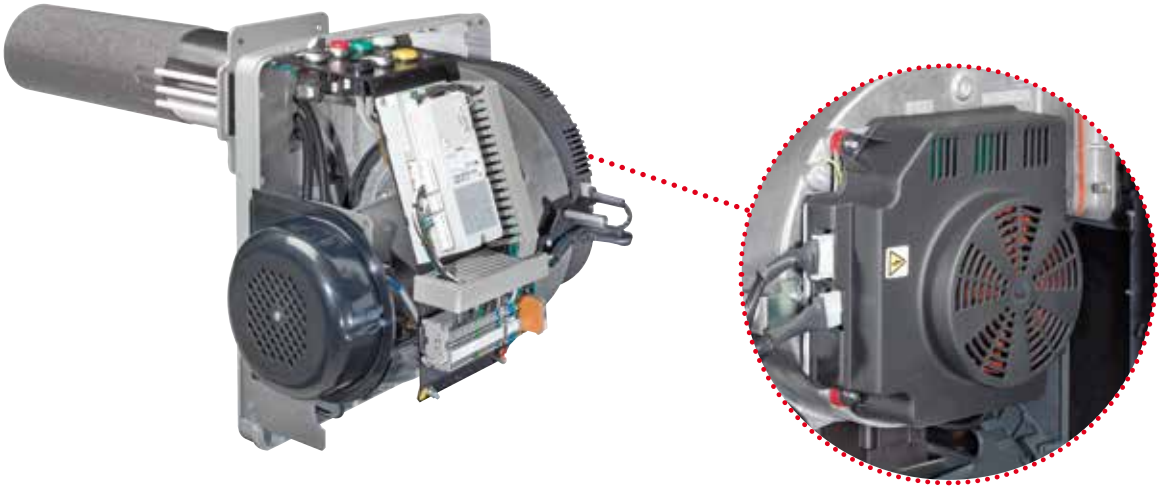

Air/Gas Mixing

The motor speed variation also controls the regulation of gas delivery. The burners are teamed with one-piece pneumatic proportioning gas valves, via which the amount of gas delivered, and hence the output produced, can be modulated. The pressure detected in the air circuit is carried to the pneumatic gas valve, which delivers an amount of gas in proportion to the airflow produced by the fan. The gas train, in order to minimize the dimensions is assembled directly onto the burner body. Gas and combustive air are mixed inside the purging circuit (mixer), starting from the intake inlet. Through the gas train, fuel is introduced into the intake air flow and optimal mixing commences with the aid of a mixer.

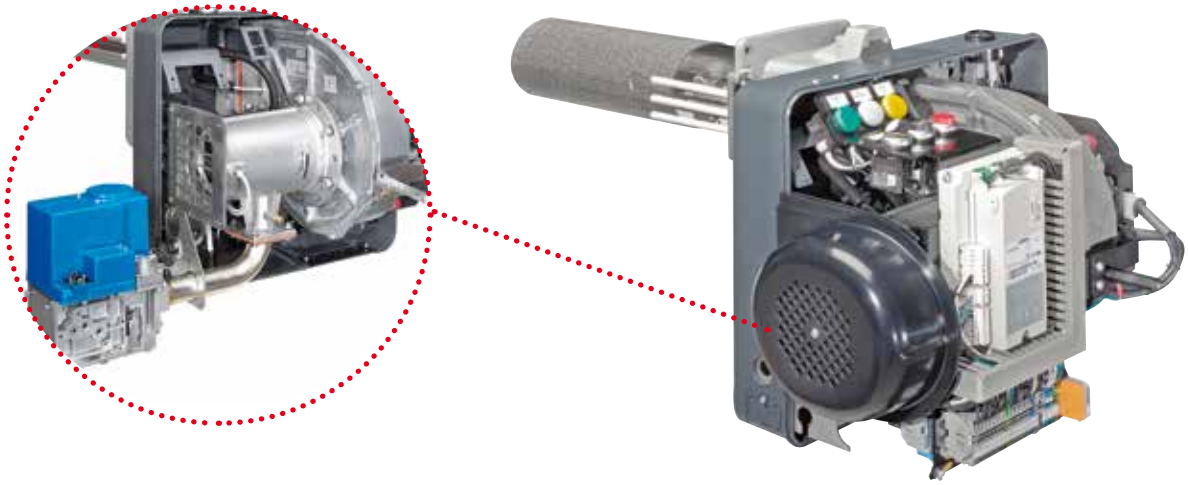

RX 700 – RX 800 – RX 1000

LMV37 Digital Burner Management System

Combustion systems are in continuous evolution and high tech solutions related to electronic systems are today utilized to obtain better performances and efficiencies.
The Burner is one of the most important components of the combustion system and its evolution is oriented towards the perfect control of operation.
Riello RX 700 – RX 800 – RX 1000 burners utilize the LMV37 digital burner management systems providing precise fuel-air ratio control with independent servomotors for modulating fuel valve(s) and air damper. The LMV37 controls are user friendly and provide maximum safety and reliability.

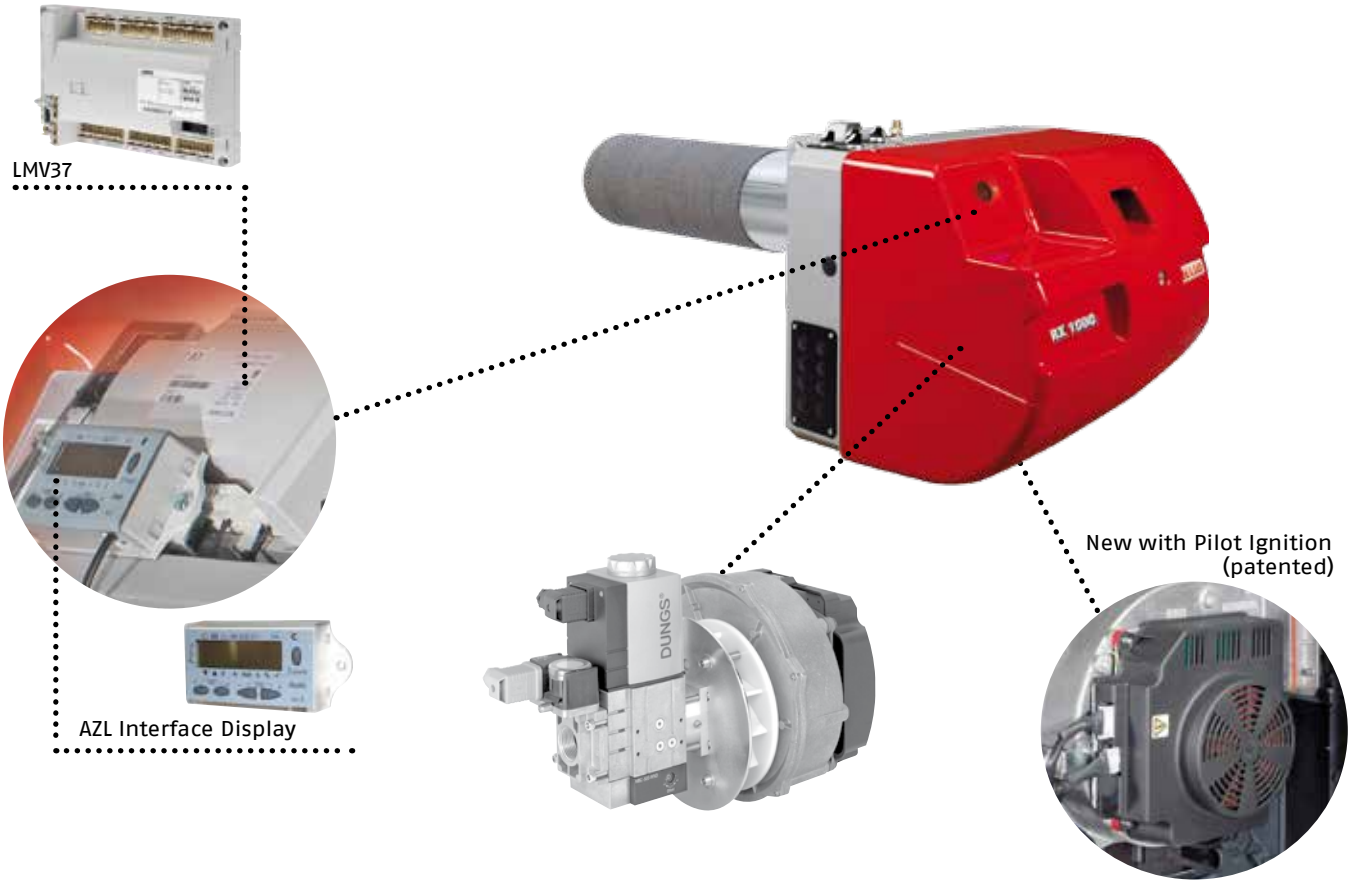

It is possible to connect the digital burner management to a display interface that allows remote control. It is a "Non-language" display; there are only symbols and parameter numbers with certain values displayed. Only English international abbreviations are used instead of numbers: this solution significantly improves the understanding of the information.

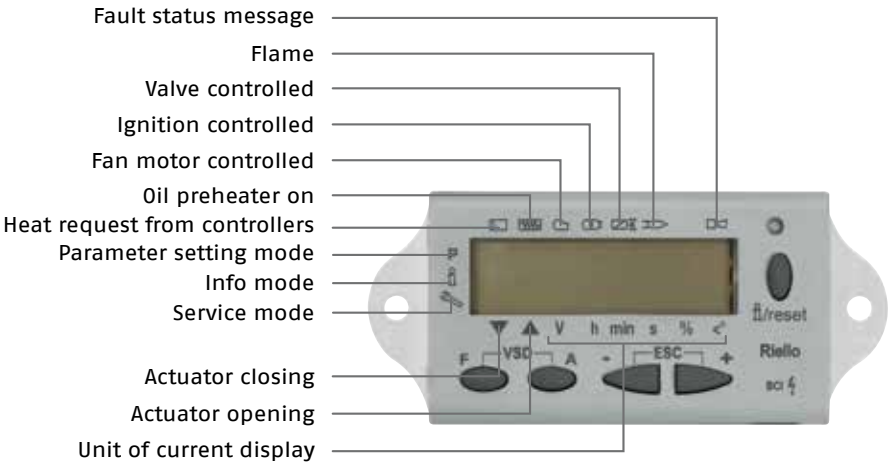

Applications

Riello Burners R&D department is able to support its Customers in defining their own products, with optimised solutions.
RX Premix gas burners are designed to satisfy different demands:

- **HVAC applications** (Boilers, Air Heaters, Furnaces, Absorption Chillers).
- **Process applications** (Bakery Ovens, Grain Dryers, Spray Paint Booths).

In this section we have collected some examples of Premix burners developed for some customers for different applications:

1. Heating, ventilation and air conditioning
2. Process industry
3. Food industry.

Application on 3-pass smoke tube condensing boiler in stainless steel

Application on condensing boiler

Hot air generator

Application on painting booth

Textile Industry

Application on bakery oven

Food Industry

Application on the painting booth

A very important application are the paint booths, in this case the premix series allows direct exchange with this advantage:

- High thermal exchange efficiency 100%
- Reduction fuel consumption (20-30% respect indirect exchange)
- It is faster to catch up the temperature set point
- There is better temperature stability
- The time is reduced when change paint / baking phase
- There are not condensing problems
- There are not chamber and chimney

To guarantee the operation of the burner immersed in an air flow, it is necessary to create a cover, as shown in the photo. The length must be in proportion to the dimension of the exchange channel, and must guarantee protection in line with the combustion area. In addition, this cover allows improved head exchange and avoids the use of other deflectors inside the channel. The material used must be stainless steel 1-1.5 mm thick.

Product Advantages at a Glance

As previously described, the Riello Burners RX series presents many advantages and many solutions.

In the following list we have summarised the most important features:

- wide modulation range, without the need of a movable combustion head mechanism;
- very compact flame with possibility to obtain high combustion intensity with reduced combustion head dimensions;
- thermal exchange increasing from irradiation, particularly at minimum output;
- reduced noise ventilation and noise to the chimney;
- high electrical absorption efficiency (70%) Brushless motor and reduction of motor vibrations;
- gas train directly assembled inside the burner body;
- metallic fibre sock without welded seams avoiding failure due to thermal stress;
- patented RRD (resonance reduction device) integrated inside the combustion head;
- extremely low emissions for low environmental impact;
- the burners of the RX series can work with LPG without modification.

Notes

Riello Burners a world of experience in every burner we sell.

11/2014

VP00844NA03

[1]

[2]

[1] BURNERS PRODUCTION PLANT
S. PIETRO, LEGNAGO (VERONA) - ITALIA

[2] HEADQUARTER BURNERS DIVISION
S. PIETRO, LEGNAGO (VERONA) - ITALIA

Across the world, Riello sets the standard in reliable and high efficiency burner technology.

With burner capacity from 17 thousand to 163 million Btu/hr, Riello gas, oil, dual fuel and Low Nox burners deliver unbeatable performance across the full range of residential and commercial heating applications, as well as in industrial processes.

With headquarter in Legnago, Italy, Riello has been manufacturing premium quality burners for over 90 year.

The manufacturing plant is equipped with the most innovative systems of assembling lines and modern manufacturing cells for a quick and flexible response to the market.

Besides, the Riello Combustion Research Centre, located in Angiari, Italy, represents one of the most modern facility in Europe and one of the most advanced in the world for the development of the combustion technology.

Today, the company's presence on worldwide markets is distinguished by a well-constructed and efficient sales network, alongside many important Training Centres located in various countries to meet its customers' needs.

Riello has 13 operational branches abroad (in Europe, America and Asia), with customers in over 60 countries.

2165 Meadowpine Blvd
Mississauga, Ontario
Canada L5N 6H6

www.riello.ca
www.riellousa.com
1-800-4-RIELLO

35 Pond Park Road
Hingham, Massachusetts
U.S.A. 02043

RIELLO