LOBEPRO ROTARY PUMPS

L266

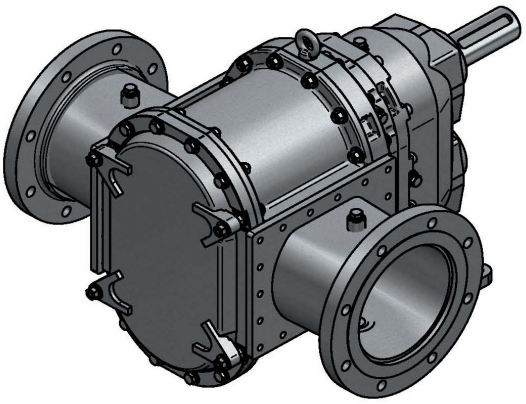

Positive Displacement Rotary Lobe Pumps

SPECIFICATIONS	US	Metric
Rated Capacity:	0-1,330 gpm	0-302 m³/h
Displacement (per 100 revolutions):	266 gal (US)	1,003 L
Working Pressure:	75 psi	5.2 bar
Max. Pressure:	100 psi	6.9 bar
Starting Torque:	3,857 in lbf	436 N m
Rated Speed:	0-500 RPM	0-500 RPM
Shaft Diameter:	2.4"	60 mm
Flange Connection Class:	ANSI 16.5-150#	DN – PN 16
Flange Connection Size:	ANSI 8"	DN 200
Weight:	748 lbs	340 kg
Solids Handling		
Spherical Compressible	3"	76 mm
Spherical Hard*	1/8"	3 mm

** Larger hard solids will pass through but may cause damage.*

MODEL >	SL266	CL266	DL266
Service	**Sludge, Mud and Slurries***	**Chemical/Corrosive**	**Oil, Gas & Abrasives**
WETTED PARTS			
Rotary Lobes			
Elastomer	NBR Opt. HNBR, FKM, EPDM or Eng. Rec.	FKM or HNBR Opt. NBR, EPDM or Eng. Rec.	FKM or HNBR Opt. NBR, EPDM or Eng. Rec.
Lobe Profile	Helix	Helix	Helix
Number of lobe wings	4	4	4
Core	Carbon Steel	Carbon Steel	Carbon Steel
Sealing Elastomers			
O-rings	FKM	FKM or Engineer Recommendation	FKM or Engineer Recommendation
Lip seals	FKM or Engineer Recommendation	FKM or Engineer Recommendation	FKM or Engineer Recommendation
Mechanical Seals			
Mechanical Seal	Duronit Opt. Tungsten Carbide, Silicon Carbide, or Eng. Rec.	Silicon Carbide Opt. Tungsten Carbide or Engineer Rec.	Silicon Carbide Opt. Tungsten Carbide or Engineer Rec.
Seal Holders	Carbon Steel with Corrosion resistant coating	Stainless Steel Type 316	Duplex Stainless Steel
Wear Plates	AR500 Steel (Brinell 500)	Stainless Steel Type 316	Duplex Stainless Steel
Housing Segments	ASTM A48 Grey Iron rust primed	Duplex Stainless Steel	Duplex Stainless Steel
Flange Ring	ASTM A36 Carbon Steel	Stainless Steel Type 316L	Duplex Stainless Steel
Bolts	Steel ASTM F568/ISO 898/I	Stainless Steel A2-A4	Duplex Stainless Steel A2-A4
Bolts- Strain Bolt	ASTM A574M-12.9 Geomet Plus Coated	Stainless Steel Type 316	Duplex Stainless Steel
Pressure Disc	Stainless Steel Type 316L	Stainless Steel Type 316L	Duplex Stainless Steel
LIMITED EXPOSURE PARTS			
Quench /Seal Cooling Chamber	ASTM A48 Grey Iron rust primed	ASTM A48 Grey Iron - SSPC-SP6 Sandblast/Paint Opt. Engineering Recommendation	ASTM A48 Grey Iron - SSPC-SP6 Sandblast/Paint with PTFE / Ceramic Teflon etched on face
Pump Cover	ASTM A48 Grey Iron rust primed	ASTM A48 Grey Iron - SSPC-SP6 Sandblast/Paint Opt. Engineering Recommendation	ASTM A48 Grey Iron - SSPC-SP6 Sandblast/Paint Opt. Engineering Recommendation
NON-WETTED PARTS			
Gears	AGMA Class 9 SAE 1045 steel	AGMA Class 9 SAE 1045 steel	AGMA Class 9 SAE 1045 steel
Gear Housing	ASTM A48 Grey Iron rust primed	ASTM A48 Grey Iron - SSPC-SP6 Sandblast/Paint Opt. Engineering Recommendation	ASTM A48 Grey Iron - SSPC-SP6 Sandblast/Paint Opt. Engineering Recommendation
Shaft	AISI 4140 Alloy Steel	AISI 4140 Alloy Steel	AISI 4140 Alloy Steel

NOTE: A wide range of optional materials are available for each model. Above specs are for standard builds. Consult LobePro for further information.
*Consult Factory for application temperature above 80°C (175°F)

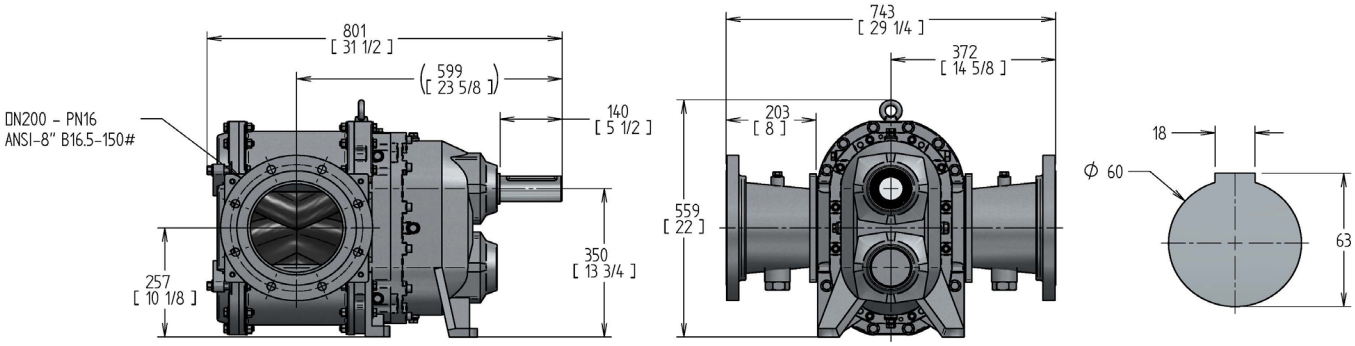

L266 CURVES

Performance Curve - NBR Lobes*

Based on 70°F (21°C) fresh water (1 cp) at Sea Level.
Output will increase as viscosity of the fluid increases from 1.

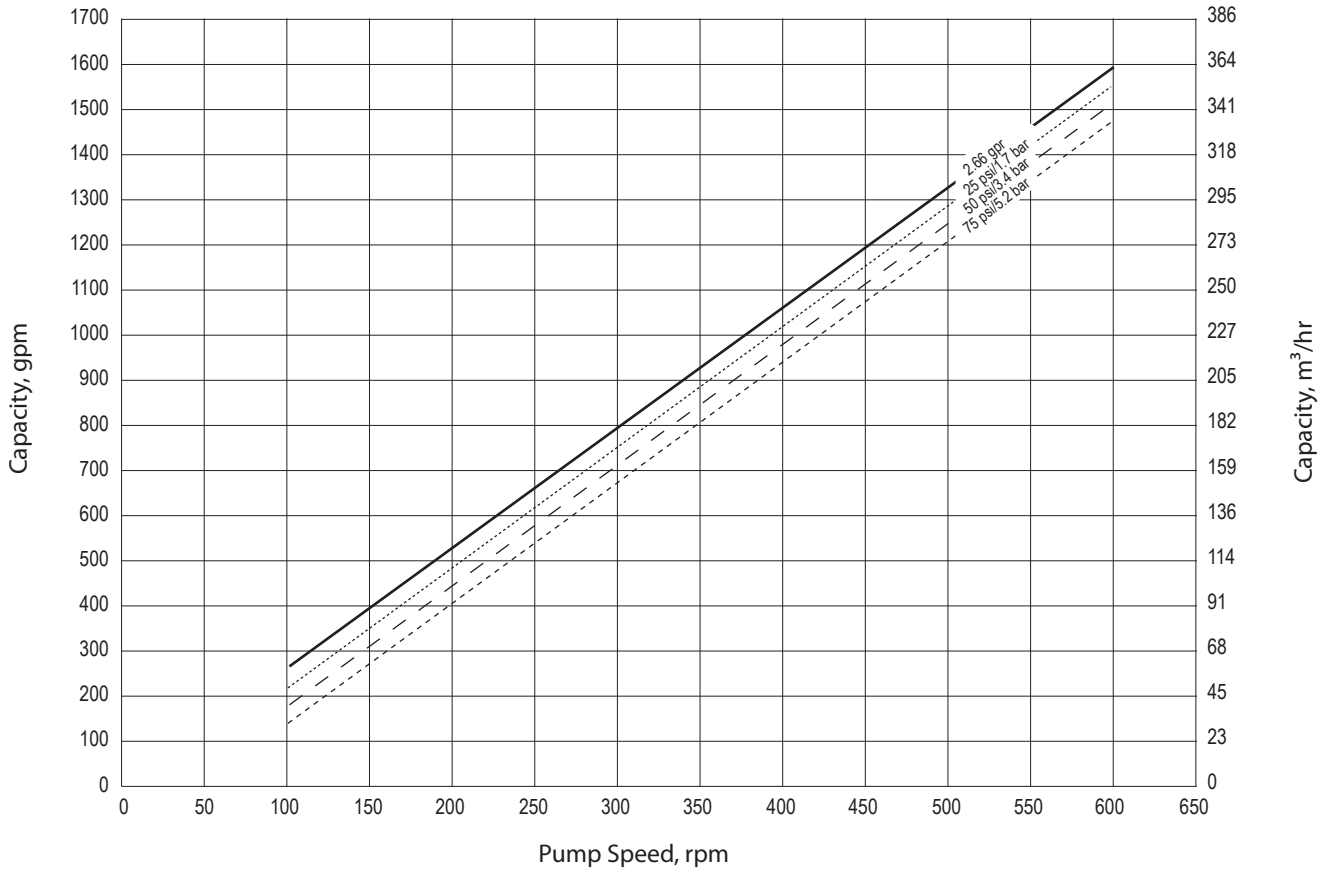

*Note: Output from lobes coated with elastomers other than NBR maybe lower. Contact Engineering for further information.

Horsepower Requirements